TOSHIBA BIPOLAR DIGITAL INTEGRATED CIRCUIT SILICON MONOLITHIC

TD6134AF

ECL PRESCALER FOR DIGITAL SYNTHESIZED TUNER

TD6134AF is a 2 modulus prescaler developed for low operating voltage digital synthesized tuner, and can operate up to 250MHz.

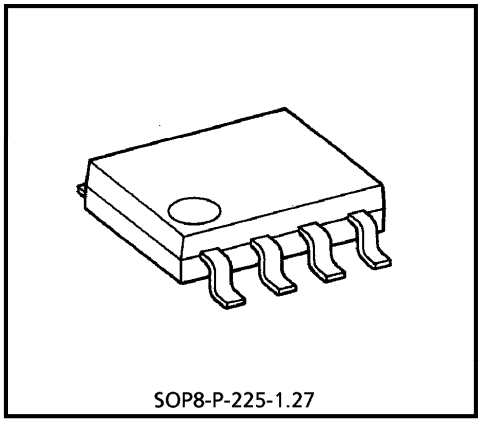

Weight : 0.08g (Typ.)

FEATURES

- Operating frequency range is 50~250MHz.
- 2 modulus prescaler : N = 4 × 15 / 16
  and N = 8 × 15 / 16
- Input voltage sensitivity is $25mV_{rms}$.
- 3V low operating supply voltage
- The package is SOP8 pins.

PIN CONNECTION (TOP VIEW)

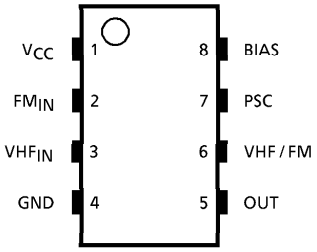

BLOCK DIAGRAM

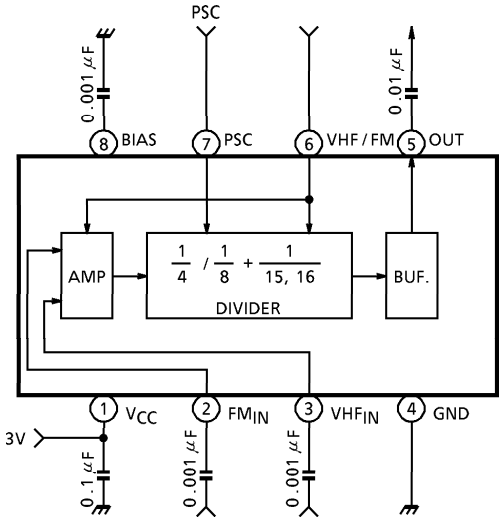

(Note) This device is vulnerable to surge voltages.
Take it into account when using this device in your system.

961001EBA2

PIN FUNCTION

PIN No.	SYMBOL	FUNCTION	REMARKS
1	V_{CC}	Power supply terminal.	—
2	FM_{IN}	Signal input terminal from FM local oscillator.	—
3	VHF_{IN}	Signal input terminal from TV VHF local oscillator.	—
4	GND	Ground terminal.	—
5	OUT	Divider signal output terminal.	—
6	VHF / FM	Dividing mode control terminal. "H" level input : VHF_{IN} is selected, 1 / 8 mode. "L" level input : FM_{IN} is selected, 1 / 4 mode.	—
7	PSC	2 modulus mode control terminal. "H" level input : N = 4 / 8 × 16 "L" level input : N = 4 / 8 × 15	—
8	BIAS	Bias capacitor terminal. Bias capacitor is connected.	—

MAXIMUM RATINGS (Ta = 25°C)

CHARACTERISTIC	SYMBOL	RATING	UNIT
Power Supply Voltage	V_{CC}	6.5	V
Power Dissipation	P_D	200	mW
Input Voltage	V_{IN}	$-0.3 \sim V_{CC} + 0.3$	V
Operating Temperature	T_{opr}	−10~60	°C
Storage Temperature	T_{stg}	−55~150	°C

ELECTRICAL CHARACTERISTICS
(Unless otherwise specified, V_{CC} = 1.8~5.5V, Ta = – 10~60°C, f_{in} = 50~250MHz)

CHARACTERISTIC		SYMBOL	TEST CIR-CUIT	TEST CONDITION	MIN.	TYP.	MAX.	UNIT
Supply Voltage		V_{CC}	—	—	1.8	3.0	5.5	V
Supply Current		I_{CC}	—	V_{CC} = 3.0V	—	5.5	9.5	mA
Operating Frequency Range		$f_{IN\ 1}$	—	FM_{IN}	50	—	150	MHz
		$f_{IN\ 2}$	—	VHF_{IN}	50	—	250	
Input Voltage Range		V_{IN}	—	—	25	—	150	mV_{rms}
Output Amplitude		V_{OUT}	—	—	0.5	—	—	V_{p-p}
Input Voltage	"H" Level	V_{IH}	—	PSC, VHF / FM	1.6	—	V_{CC}	V
	"L" Level	V_{IL}	—	PSC, VHF / FM	0	—	1.0	
Input Current	"H" Level	I_{IH}	—	PSC VHF / FM V_{CC} = 5.0V, V_{IH} = 4.0V	—	—	60	μA
	"L" Level	I_{IL}	—	PSC VHF / FM V_{CC} = 5.0V, V_{IL} = 1.0V	—	—	10	

TEST CIRCUIT (Input voltage sensitivity)

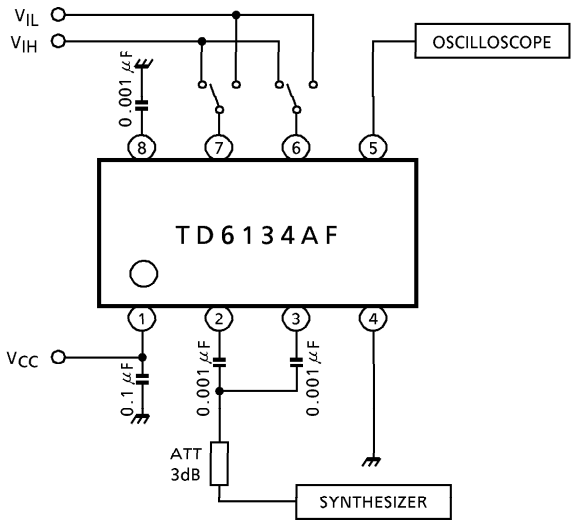

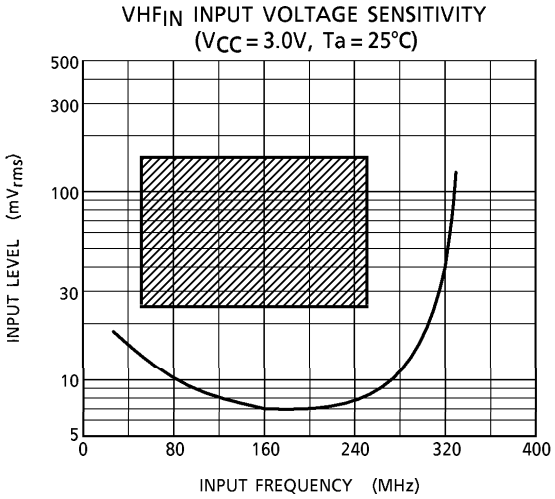

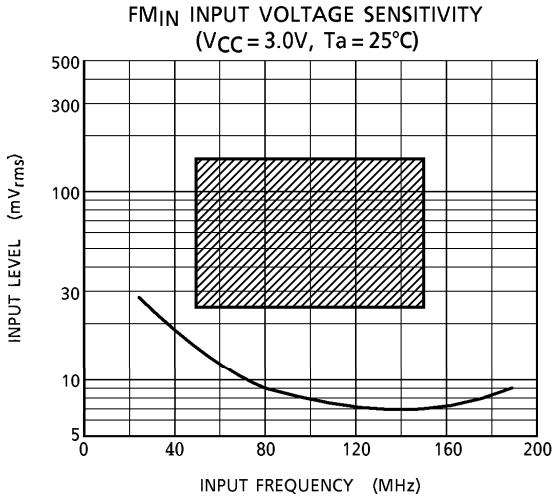

(Note) Operating Range (V_{CC} = 1.8~5.5V, Ta = − 10~60°C)

OUTLINE DRAWING

SOP8-P-225-1.27

Unit : mm

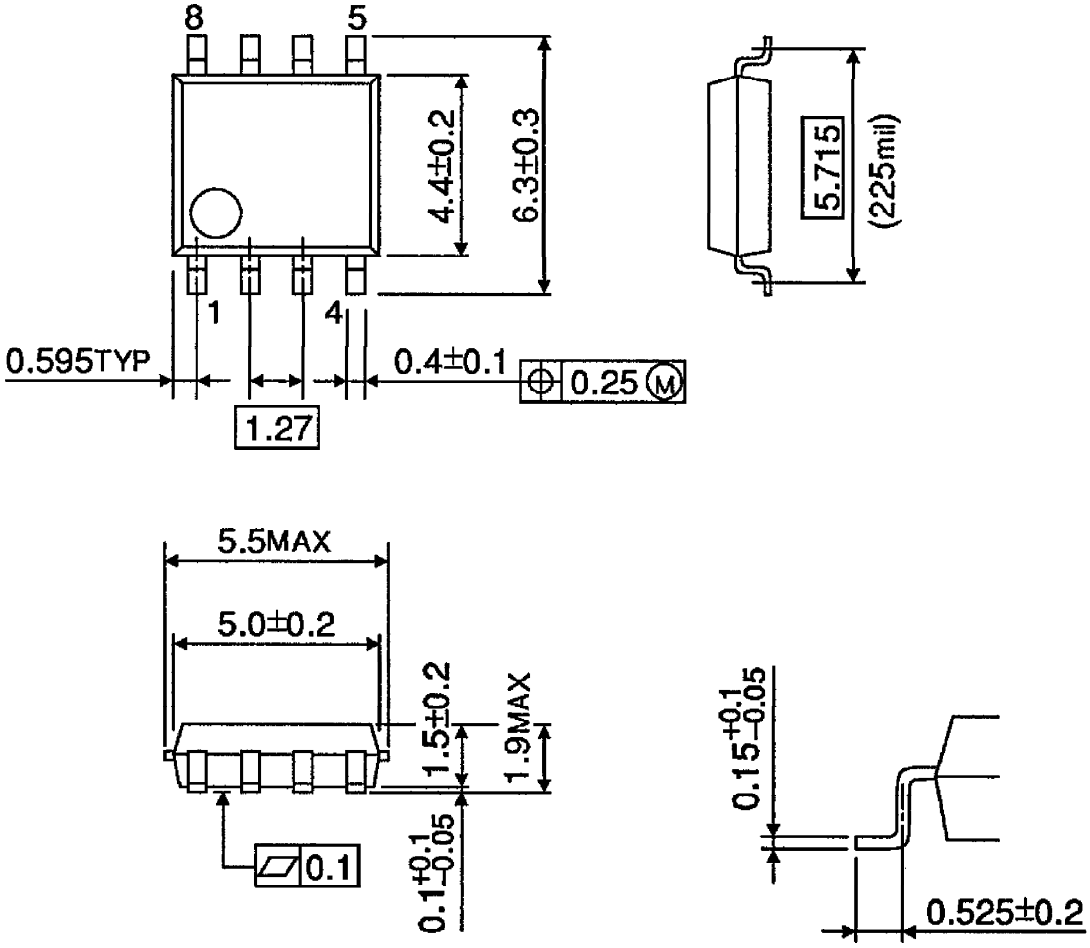

Weight : 0.08g (Typ.)