M57704SL

360-380MHz, 12.5V, 13W, FM MOBILE RADIO

OUTLINE DRAWING Dimensions in mm

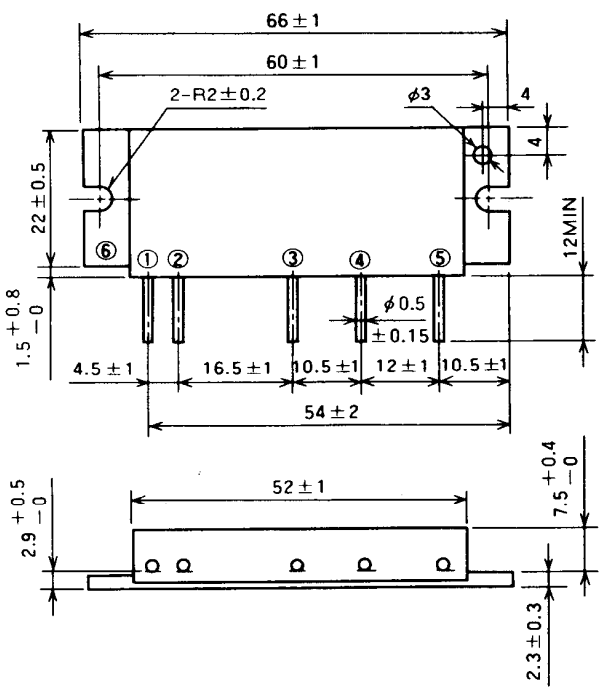

H3

BLOCK DIAGRAM

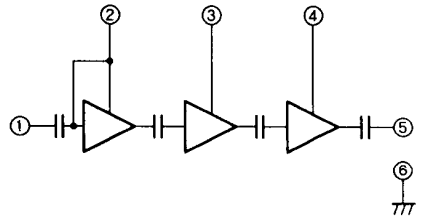

PIN :
①Pin : RF INPUT
②Vcc1 : 1st. DC SUPPLY
③Vcc2 : 2nd. DC SUPPLY
④Vcc3 : 3rd. DC SUPPLY
⑤Po : RF OUTPUT
⑥GND : FIN

ABSOLUTE MAXIMUM RATINGS (T_C = 25℃ unless otherwise noted)

Symbol	Parameter	Conditions	Ratings	Unit
V_{CC}	Supply voltage		17	V
I_{CC}	Total current		5	A
$P_{in(max)}$	Input power	$Z_G = Z_L = 50\ \Omega$	0.4	W
$P_{o(max)}$	Output power	$Z_G = Z_L = 50\ \Omega$	20	W
$T_{C(OP)}$	Operation case temperature		− 30 to 110	℃
T_{stg}	Storage temperature		− 40 to 110	℃

Note. Above parameters are guaranteed independently.

ELECTRICAL CHARACTERISTICS (T_C = 25℃ unless otherwise noted)

Symbol	Parameter	Test conditions	Limits		Unit
			Min	Max	
f	Frequency range	P_{in} = 0.2W V_{CC} = 12.5V $Z_G = Z_L = 50\ \Omega$	360	380	MHz
P_o	Output power		13		W
η_T	Total efficiency		35		%
2fo	2nd. harmonic			− 30	dBc
ρ_{in}	Input VSWR			2.8	−
−	Load VSWR tolerance	V_{CC} = 15.2V, P_o = 14W (P_{in} : controlled) Load VSWR=20:1 (All phase), 2sec. $Z_G = 50\ \Omega$	No degradation or destroy		−

Note. Above parameters, ratings, limits and conditions are subject to change.