MOTOROLA

MC13146

Product Preview

Low Power Integrated Transmitter for ISM Band Applications

LOW POWER DC – 2.0 GHz TRANSMITTER

SEMICONDUCTOR TECHNICAL DATA

The MC13146 is an integrated RF transmitter targeted at ISM band applications. It features a 50 Ω linear Mixer with linearity control, voltage controlled oscillator, divide by 64/65 dual modulus Prescaler and Exciter. Together with the receiver chip (MC13145) and the baseband chip (MC33410), a complete 900 MHz cordless phone system can be implemented. This device may be used in applications within 2 GHz since its RF bandwidth is greater than 2.4 GHz.

- Low Distortion Exciter: $P_{out\_1\ dB}$ Compression Point ≈ 8 dBm
- HIgh Mixer Linearity: IIP3 = 10 dBm
- 50 Ω Mixer Input Impedance
- Differential Open Collector Mixer Output
- 20 dB Power Conversion Gain
- Low Power 64/65 Dual Modulus Prescaler (MC12054 type)
- 2.7 to 6.5 V Operation, Low Current Drain (25 mA @ 2.0 GHz)
- Powerdown Mode: <1.0 μA
- 2.4 GHz RF Bandwidth
- 1.8 GHz IF Bandwidth

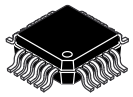

FTA SUFFIX
PLASTIC PACKAGE
CASE 977
(LQFP–24)

ORDERING INFORMATION

Device	Operating Temperature Range	Package
XC13146FTA	T_A = –40 ° to +85°C	LQFP–24

PIN CONNECTIONS
LQFP–24

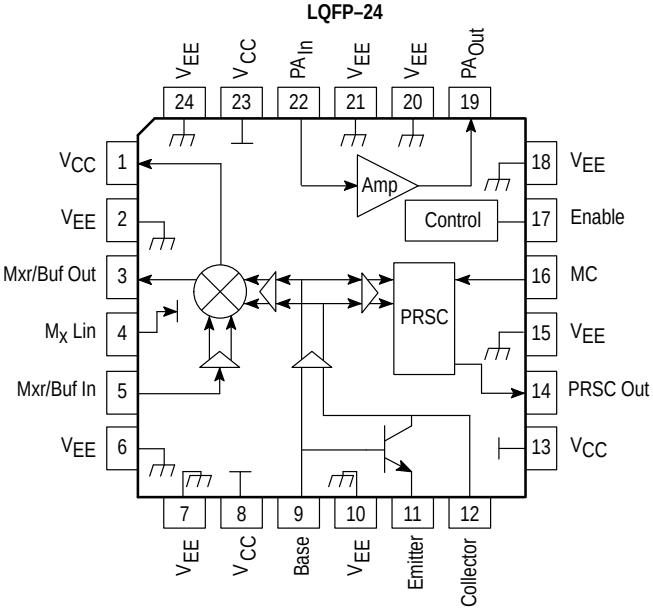

MAXIMUM RATINGS

Rating	Symbol	Value	Unit
Power Supply Voltage	V_{CC}(max)	7.0	Vdc
Junction Temperature	T_J(max)	150	°C
Storage Temperature Range	T_{stg}	–65 to +150	°C

NOTE: ESD data available upon request.

RECOMMENDED OPERATING CONDITIONS

Characteristic	Symbol	Min	Typ	Max	Unit
Power Supply Voltage (TA = 25°C)					
	VCC	2.7	–	6.5	Vdc
	VEE	–	0	–	Vdc
RF Frequency Range	f_{RF}	1.0	–	2500	MHz
Ambient Temperature Range	T_A	–40	–	85	°C
Maximum Input Signal Level	P_{IF}				
– with no damage		–	–10	–	dBm
– with minor performace degradation		–	15	–	dBm

TRANSMITTER DC ELECTRICAL CHARACTERISTICS (T_A = 25°C, V_{CC} = 3.0 Vdc, no input signal, unless otherwise noted)

Characteristic	Symbol	Min	Typ	Max	Unit
Total Supply Current (Enable = V_{CC})	I_{total}	-	25	-	mA
Power Down Current (Enable = V_{EE})	I_{total}	-	0.1	-	µA

TRANSMITTER AC ELECTRICAL CHARACTERISTICS (T_A = 25°C, V_{CC} = 3.0 Vdc, Enable = 3.0 Vdc, unless otherwise noted)

Characteristics	Symbol	Min	Typ	Max	Unit
Output Power (with external matching)	$P_{A\_P_O}$	–	0	–	dBm
Distortion (@ 820 MHz = f_{IF_out}) (Note 1)	$P_{1dBC.Pt.}$	–	8.0	–	dBm
Mixer/Buffer (@ 900 MHz = f_{osc}) (Note 1)	P_{Mx/Buf_out}	–	–18	–	dBm
Output Harmonics (with external matching @ 820 MHz)					
2nd	P_{A-2f}	–	–25	–	dBc
3rd	P_{A-3f}	–	–35	–	dBc
VCO Phase Noise (@ 10 kHz offset) (Note 1)		–	–80	–	dBc/Hz
Mixer/Buffer Output Impedance		–	50	–	Ω
Prescalar Output Level (10 k || 8.0 pF load)		–	0.5	–	V_{pp}
MC Current Input (optional)		–	200	–	μA_{pp}

NOTE: Tests run during test system/device characterization.

Figure 1. Test Circuit

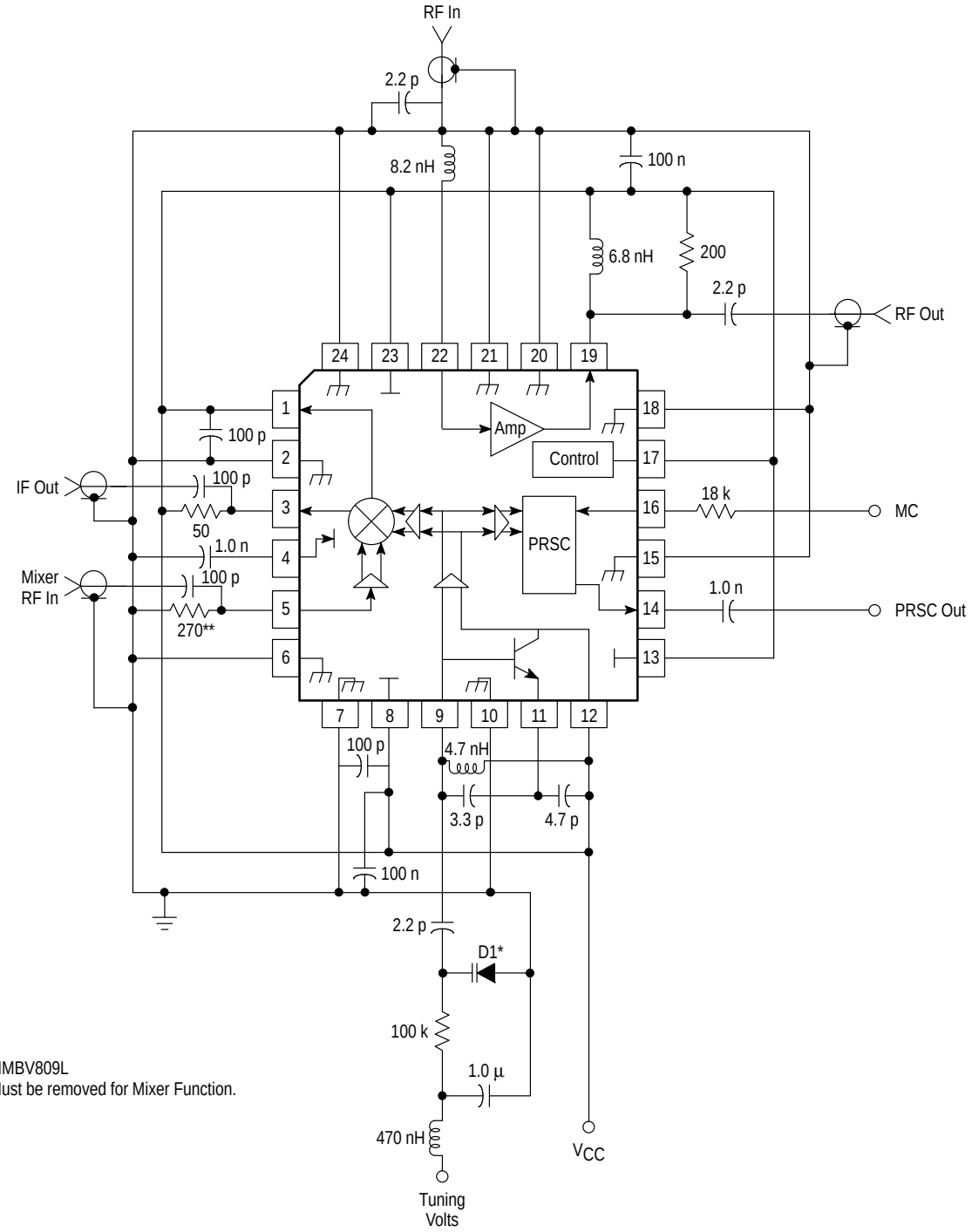

* MMBV809L
** Must be removed for Mixer Function.

OUTLINE DIMENSIONS

FTA SUFFIX
PLASTIC PACKAGE
CASE 977–01
(LQFP–24)
ISSUE O

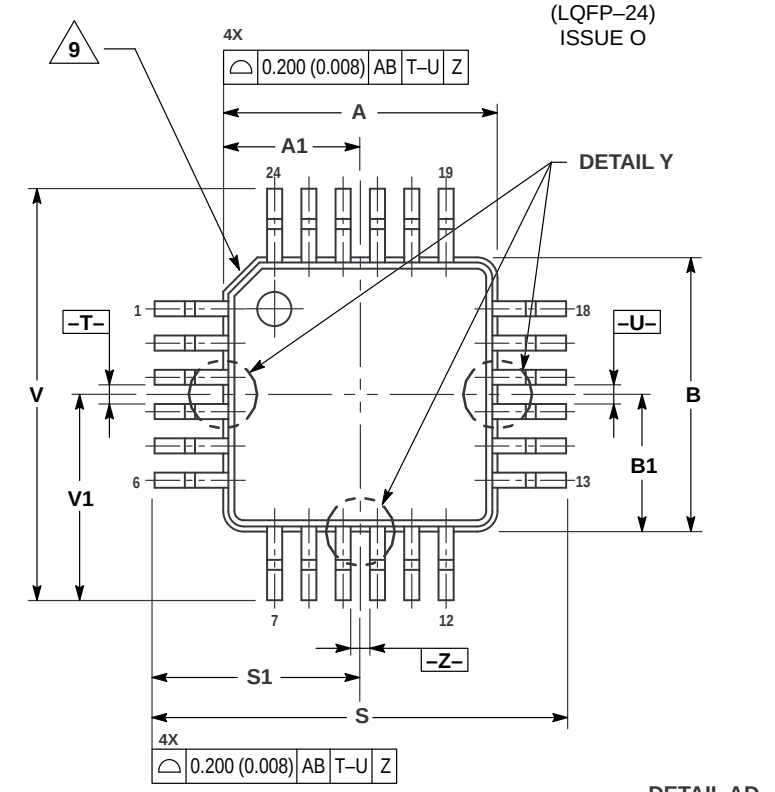

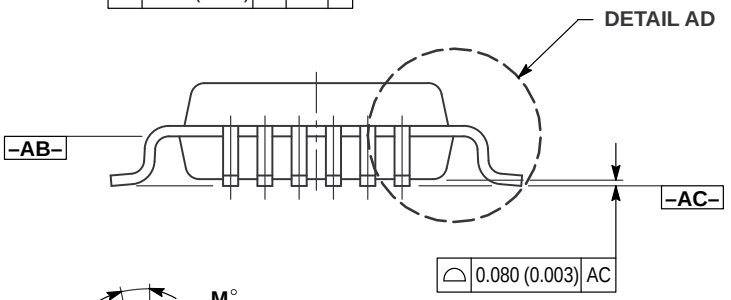

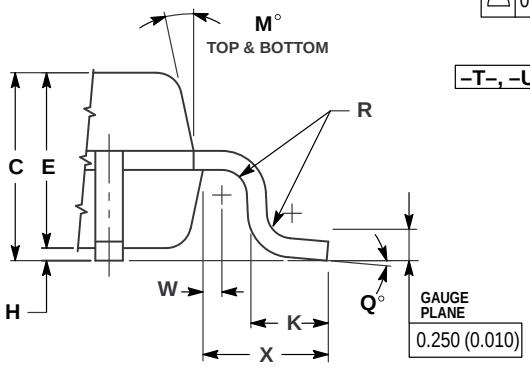

DETAIL AD

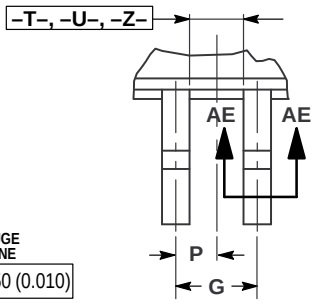

DETAIL Y

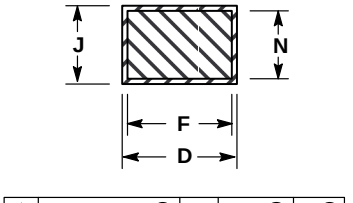

SECTION AE–AE

NOTES:
1. DIMENSIONING AND TOLERANCING PER ANSI Y14.5M, 1982.
2. CONTROLLING DIMENSION: MILLIMETER.
3. DATUM PLANE –AB– IS LOCATED AT BOTTOM OF LEAD AND IS COINCIDENT WITH THE LEAD WHERE THE LEAD EXITS THE PLASTIC BODY AT THE BOTTOM OF THE PARTING LINE.
4. DATUMS –T–, –U–, AND –Z– TO BE DETERMINED AT DATUM PLANE –AB–.
5. DIMENSIONS S AND V TO BE DETERMINED AT DATUM PLANE –AC–.
6. DIMENSIONS A AND B DO NOT INCLUDE MOLD PROTRUSION. ALLOWABLE PROTRUSION IS 0.250 (0.010) PER SIDE. DIMENSIONS A AND B DO INCLUDE MOLD MISMATCH AND ARE DETERMINED AT DATUM PLANE –AB–.
7. DIMENSION D DOES NOT INCLUDE DAMBAR PROTRUSION. DAMBAR PROTRUSION SHALL NOT CAUSE THE D DIMENSION TO EXCEED 0.350 (0.014).
8. MINIMUM SOLDER PLATE THICKNESS SHALL BE 0.0076 (0.0003).
9. EXACT SHAPE OF EACH CORNER IS OPTIONAL.

	MILLIMETERS		INCHES	
DIM	MIN	MAX	MIN	MAX
A	4.000 BSC		0.157 BSC	
A1	2.000 BSC		0.079 BSC	
B	4.000 BSC		0.157 BSC	
B1	2.000 BSC		0.079 BSC	
C	1.400	1.600	0.055	0.063
D	0.170	0.270	0.007	0.011
E	1.350	1.450	0.053	0.057
F	0.170	0.230	0.007	0.009
G	0.500 BSC		0.020 BSC	
H	0.050	0.150	0.002	0.006
J	0.090	0.200	0.004	0.008
K	0.500	0.700	0.020	0.028
M	12° REF		12° REF	
N	0.090	0.160	0.004	0.006
P	0.250 BSC		0.010 BSC	
Q	1°	5°	1°	5°
R	0.150	0.250	0.006	0.010
S	6.000 BSC		0.236 BSC	
S1	3.000 BSC		0.118 BSC	
V	6.000 BSC		0.236 BSC	
V1	3.000 BSC		0.118 BSC	
W	0.200 REF		0.008 REF	
X	1.000 REF		0.039 REF	

How to reach us:

USA / EUROPE / Locations Not Listed: Motorola Literature Distribution;
P.O. Box 5405, Denver, Colorado 80217. 1–303–675–2140 or 1–800–441–2447

JAPAN: Nippon Motorola Ltd.: SPD, Strategic Planning Office, 141,
4–32–1 Nishi–Gotanda, Shagawa–ku, Tokyo, Japan. 03–5487–8488

Customer Focus Center: 1–800–521–6274

Mfax™: RMFAX0@email.sps.mot.com – TOUCHTONE 1–602–244–6609
Motorola Fax Back System – US & Canada ONLY 1–800–774–1848
– http://sps.motorola.com/mfax/

ASIA / PACIFIC: Motorola Semiconductors H.K. Ltd.; 8B Tai Ping Industrial Park,
51 Ting Kok Road, Tai Po, N.T., Hong Kong. 852–26629298

HOME PAGE: http://motorola.com/sps/