Compact Cost-effective Fast Charger

Features

- Monolithic linear charger requires no inductors, external sense resistors or blocking diodes
- A few external components are required
- 4.75V to 6.5V operating input voltage range.
- Battery temperature monitor with thermistor (NTC) interface
- Programmable the charging current to achieve the fastest charging rate without the risk of overloading the adapter
- Thermal limit control of charging current prevents overheating
- Maximum of 1μA battery drain current
- Charging-current monitor output for system supervision of charging status
- TQFN-16, RoHS compliant lead-free package

Applications

- Cellular phones and smart phones
- PDAs Portable Media Viewers
- Digital Still Camera
- Cradle Chargers

Product Description

The CM9101 is an integrated linear-mode charger for single-cell, Lithium-ion batteries. It designed for compact and cost-sensitive handheld devices. It provides programming charge current, battery temperature monitoring, charge status indicator, charge termination, high accuracy fast charge current and automatic charge voltage regulation. It requires no external blocking diodes or current sense resistors and needs only one external resistor to program the charging current.

The CM9101 provides Precharge, Fast-charge (constant-current), and Termination (constant-voltage) charging modes. The Precharge/Termination currents are preset to 10/5% of the Fast-charge current level. A host system can monitor the actual charge current at the ISET pin.

The battery temperature can continuously measured by an external thermistor through the THERM pin. When the chip temperature reach 140°C, the CM9101 goes into a latched shutdown mode stop charging until the chip temperature is below 140°C will gradually charge and 105°C resume fast charge.

When the adapter is not present, the CM9101 draws less than 1μA of drain current from the battery in ultra low power sleep mode.

The CM9101 is packaged in a miniature 16-pin TQFN. It can operate over the ambient temperature range of -40°C to 85°C.

Typical Application

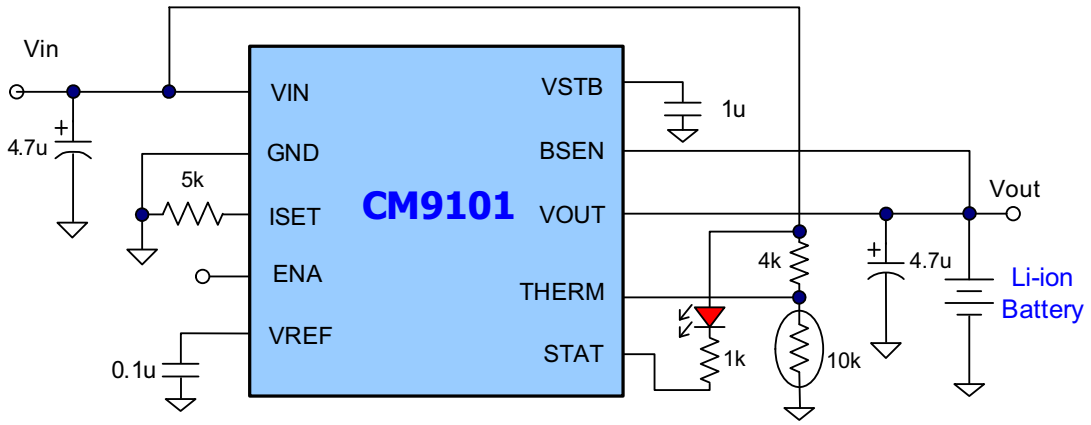

© 2006 California Micro Devices Corp. All rights reserved.

Package Pinout

PACKAGE / PINOUT DIAGRAM

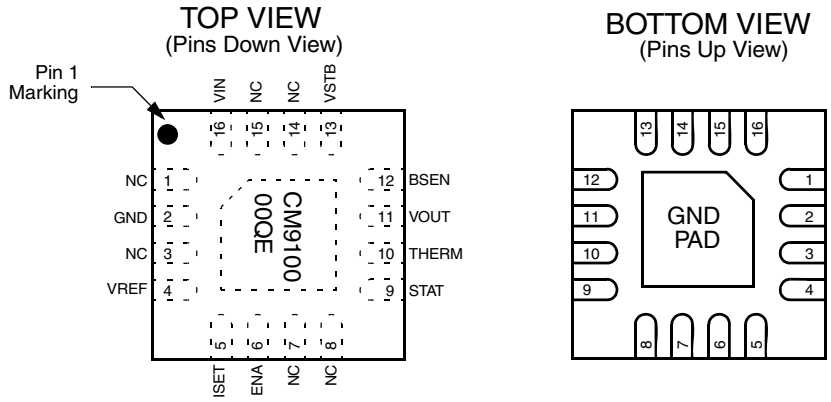

CM9101-00QE
16-Lead TQFN Package (4mm x 4mm)

Note: This drawing is not to scale.

PIN DESCRIPTIONS

LEAD(s)	NAME	DESCRIPTION
1	NC	No connect.
2	GND	Ground pin.
3	NC	No connect.
4	VREF	4.2V, 2 mA reference output pin.
5	ISET	Pin to set the maximum charging current in the Fast charge (CC) mode. Also, reflects actual charging current. A resistor between this pin and ground sets the charge current, I_{CH}: $R_{ISET} = \frac{1000 \times 2.5V}{I_{CC}}$
6	ENA	Enable pin. Logic high (default value) enables charging. Logic low disables charging.
7	NC	No connect.
8	NC	No connect.
9	STAT	Charging status indicator pin (open-drain output).
10	THERM	Thermistor input pin from battery monitoring circuit.
11	VOUT	Charger output pin.
12	BSEN	Battery voltage remote sense pin.
13	VSTB	4.2V output pin, connect a cap to ground to increase stability.
14	NC	No connect.
15	NC	No connect.
16	VIN	Positive input supply voltage pin, which powers the charger.

© 2006 California Micro Devices Corp. All rights reserved.

Ordering Information

PART NUMBERING INFORMATION			
		Lead Free Finish	
Pins	Package	Ordering Part Number[1]	Part Marking
16	TQFN	CM9101-00QE	CM9101 00QE

Note 1: Parts are shipped in Tape & Reel form unless otherwise specified.

Specifications

ABSOLUTE MAXIMUM RATINGS		
PARAMETER	**RATING**	**UNITS**
ESD Protection (HBM)	±2	kV
V_{IN} to GND	[GND - 0.3] to +6.5	V
Pin Voltages V_{OUT}, V_{STB} to GND ENA, I_{SET}, STAT to GND BSEN, THERM, V_{REF} to GND	 [GND - 0.3] to +6.5 [GND - 0.3] to +6.5 [GND - 0.3] to +6.5	 V V V
Storage Temperature Range	-65 to +150	°C
Operating Temperature Range (Ambient)	-40 to +85	°C
Lead Temperature (Soldering, 10sec)	300	°C

ELECTRICAL OPERATING CHARACTERISTICS (SEE NOTE 1)						
SYMBOL	**PARAMETER**	**CONDITIONS**	**MIN**	**TYP**	**MAX**	**UNITS**
V_{IN}	VIN Supply Voltage	V_{IN}	4.75		6.5	V
UVLO	UVLO Cut-in Threshold	All outputs are at no load	3.3	3.5	3.6	V
I_Q	Quiescent Current	Charging modes, excluding current to I_{SET} and STAT pins. All outputs are at no load.		2		mA
I_{SHDN}	Shutdown Supply Current	V_{IN} = 5.0V, ENA = low, excluding current to I_{SET} and STAT pins.		50	100	µA
I_{DR}	Battery Drain Current	V_{IN} = 0V (100Ω - resistor to ground), V_{BAT} = 4.2V		0.5	1	µA
Charger Function						
I_{PR}	Precharge Mode Current	V_{BSEN} < 3.2V	0.85 x I_{PR}	$I_{PR} = \frac{250}{R_{SET(k\Omega)}}$	1.14 x I_{PR}	mA
V_{CC}	CC Mode Voltage Threshold		3.20	3.30	3.40	V

© 2006 California Micro Devices Corp. All rights reserved.

Specifications (cont'd)

ELECTRICAL OPERATING CHARACTERISTICS (SEE NOTE 1)						
SYMBOL	**PARAMETER**	**CONDITIONS**	**MIN**	**TYP**	**MAX**	**UNITS**
I_{CC}	CC Mode Charging Current,	V_{BSEN} > 3.5V	0.92 x I_{CC}	$I_{CC} = \frac{2500}{R_{SET(k\Omega)}}$	1.08 x I_{CC}	mA
V_{CV}	CV Mode Voltage Threshold		4.190	4.200	4.210	V
I_{TERM}	Charge Termination Current	V_{BSEN} > 4.190V	0.8 x I_{TERM}	$I_{TERM} = \frac{100}{R_{SET(k\Omega)}}$	1.2 x I_{TERM}	mA
V_{RCH}	Recharge Mode Threshold		4.090	4.100	4.110	V
CT	Constant-temperature Mode, Limit	(Note 2)	95	105	125	C
OTP_{LIMIT}	Over-temperature Protection, Limit	(Note 3)	130	140	150	C
OCP_{LIMIT}	Over-current Charging (OCP), Limit	(Note 4)	0.9	1.0	1.1	A
R_{DSON}	R_{DSON} of Charger MOSFET	I_{CC} = 500mA	100	120	150	mΩ
VREF						
V_{REF}	Regulated Voltage V_{REF}	I_{REF} < 1mA	4.190	4.200	4.210	V
VSTB						
V_{STB}	Regulated Voltage V_{STB}		4.100	4.200	4.300	V
Control Function						
I_{BSEN}	BSEN Pin Leakage Current	V_{IN} = 0		0.2	1.0	µA
V_{STAT}	STAT (Open Drain) Output Low Voltage	I_{SINK} = 5mA I_{SINK} = 20mA			0.1 0.5	V V
$V_{IH\ EN}$	ENA Input High Level		1.5			V
$V_{IL\ EN}$	ENA Input Low Level				0.4	V
Thermistor Function (Note 4, 5)						
V_{BH}	Battery HOT Voltage Threshold (THERM Pin)	V_{IN} = 5.0V (Note 6)	0.9 x V_{BH}	V_{BH} = 0.5 x V_{IN}	1.1 x V_{BH}	V
V_{BC}	Battery COLD Voltage Threshold (THERM Pin)	V_{IN} = 5.0V (Note 6)	0.9 x V_{BC}	V_{BC} = 7/8 x V_{IN}	1.1 x V_{BC}	V
	Hysterezis of V_{BH}, V_{BC}		80	100	120	mV

Note 1: V_{IN} = 5.0V. All outputs are on. T_A = 25°C unless otherwise specified.

Note 2: When chip temperature reaches 105°C, the IC's internal thermal limit will maintain this temperature by decreasing the programmed charge current.

Note 3: When chip temperature reaches 140°C, the IC goes into a latched shutdown mode. It stops charging, stops supplying V_{OUT}). To resume the charging function, a toggle of V_{IN} is required.

Note 4: This feature can be disabled by connecting the THERM pin to GND.

Note 5: This function requires a Thermistor connected between the THERM pin and GND. Another resistor connected between THERM pin and V_{IN} is required, its value should equal the Thermistor Hot Value (at 50°C). In order to catch both the 0°C and 50°C thresholds (typical range for Li-ion battery) use Thermistors following 7/1 ratio (Thermistor COLD/Thermistor HOT=7).

Note 6: If the battery HOT/COLD detection identifies a condition outside the thresholds, the IC stops charging the battery and waits for the temperature to return to the normal value.

© 2006 California Micro Devices Corp. All rights reserved.

Typical Performance Curves

Charging Algorithm
Battery Emulator, Cbattery = 30 mF
R_{ISET} = 5 kΩ

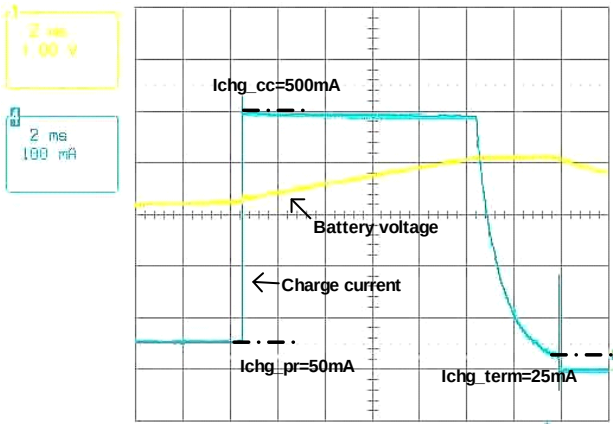

Time (2 ms/div)

Battery Current Thresholds

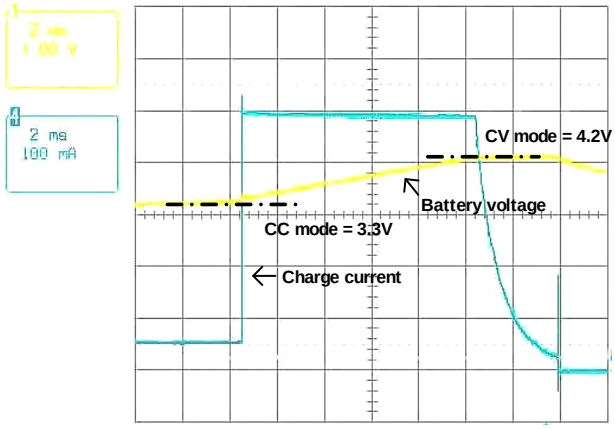

Time (2 ms/div)

Battery Voltage Thresholds

Functional Block Diagram

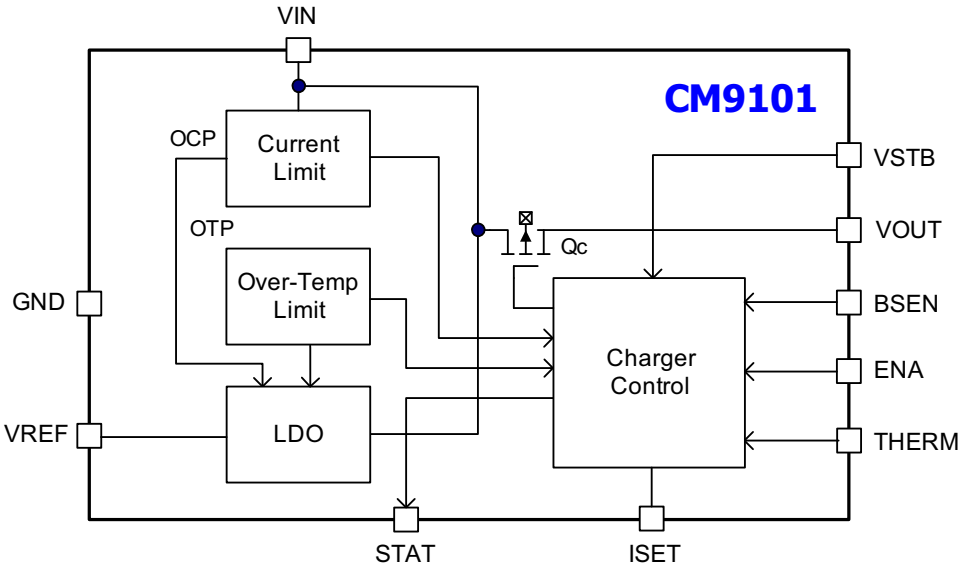

© 2006 California Micro Devices Corp. All rights reserved.

Flow Chart

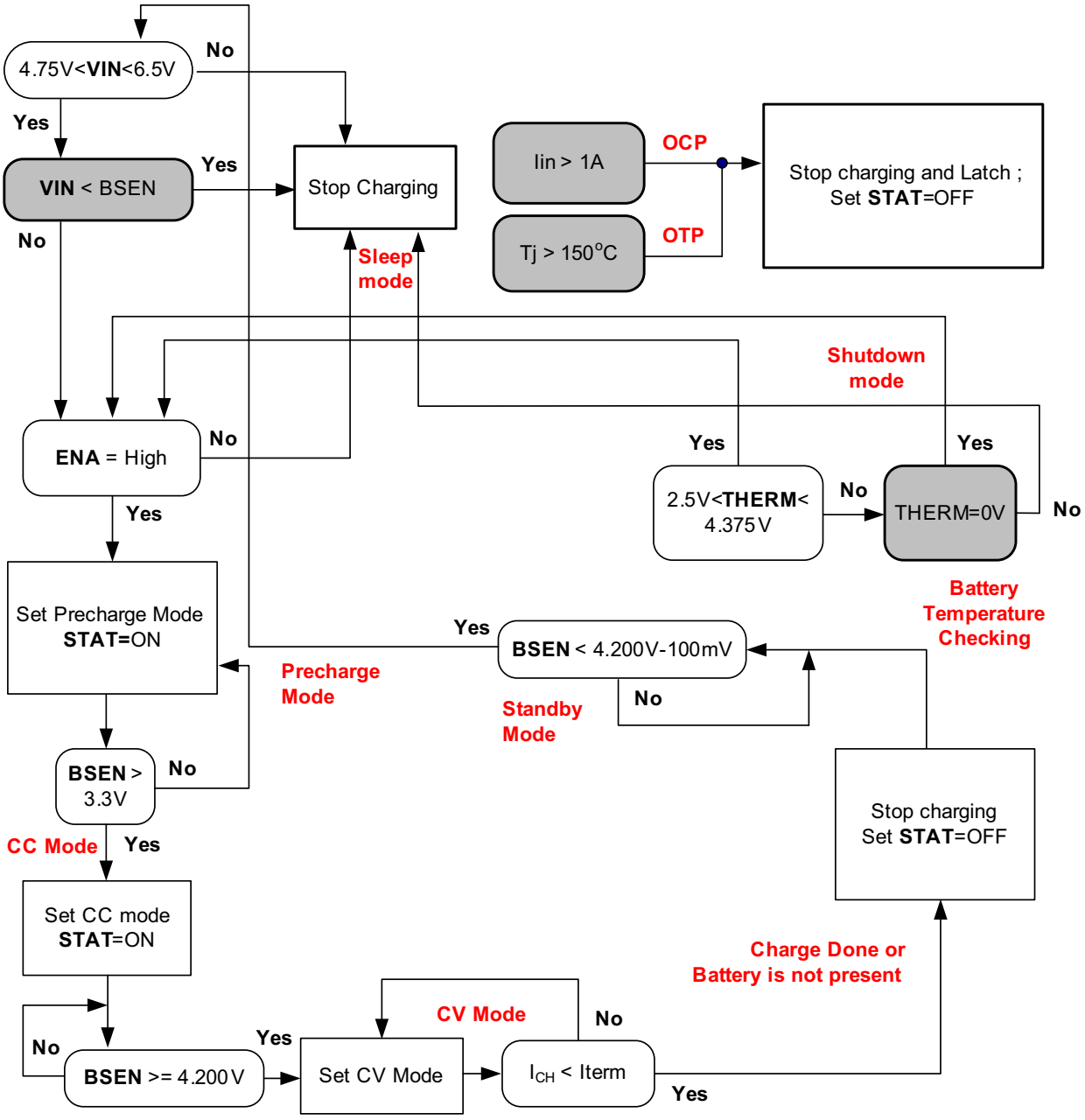

Note: If Therm is used, during any charging mode, removing a battery will cause the CV mode, then termination, the equivalent to charge done Until the battery is returned the charger will cycle between standby mode and recharge cycle.

© 2006 California Micro Devices Corp. All rights reserved.

Application Information

The CM9101 is an integrated charger with a charging profile tailored for single-cell graphite electrode (anode) Li-ion batteries. With single resistor charge current programming, the CM9101 can provide charge currents up to 1A, or limited to 100mA/500mA for USB input applications.

The charger features the three modes required for a safe and reliable Li-ion charging profile; Precharge, Fast-charge, and Termination charge. Extensive safety features include battery temperature monitoring, voltage and current monitoring. A status indicator provides charge state information.

Linear Charger vs. Switching Charger

A Li-ion battery charger can be either a switching or a linear regulator. A switching regulator type charger achieves higher efficiency, typical 90% or better, over a wide range of load and line conditions and generally offers a faster charging speed. However, a switching charger requires an external power inductor, which occupies substantial PC board space with added weight. Another issue with switching regulators is the switching noise and the potential EMI it generates.

In contrast, The CM9101 linear charger is implemented with a single IC, without the use of an inductor. The CM9101 provides a complete Li-ion charging control system, with integrated power MOSFETs and several important features, requiring just a few external resistors and capacitors for a compact system design. A sophisticated thermal management system addresses the concerns commonly associated with linear chargers.

Input

When using a constant-voltage, 5VDC nominal, AC adapter, the semi-regulated voltage to the charger, after accounting for the conduction losses through the power cord and connector contacts, is a voltage in the range of 5.0V to 6.0V.

The USB standard specifies a 5.0V +/-5% bus voltage, capable of 500mA (High Power peripheral configuration) of current. When using a USB input, the charging current must be limited to <500mA, which is set with the Rset resistor. In a system that requires 100mA starting current until told by the host controller to go into High Power mode, the circuit in Figure 1 can be used. Q1 can be the output of the controller.

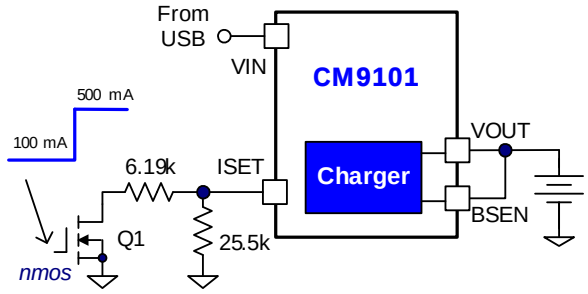

Figure 1. USB Input Circuit

Charging Li-ion Batteries

Once the CM9101 detects the presence of a valid AC adapter, and checks that the battery voltage at BSEN is less then V_{IN} and that the battery temperature in within the correct range, it is ready to charge the Li-ion battery.

If the battery voltage is deeply discharged (less than 3.2V), the CM9101 will start in the Precharge mode, charging at 10% of the programmed Fast-charge current level. See Figure 2. While the battery is charging, the status pins will be set to STAT=0. The Precharge current will gradually bring the battery voltage to above 3.2V.

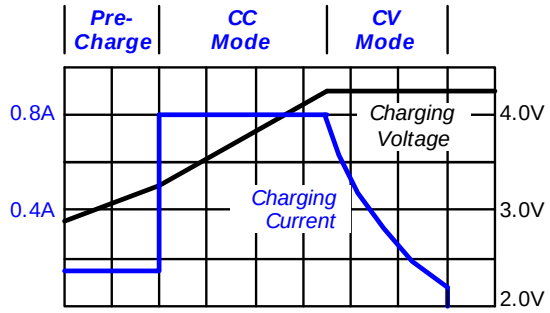

Figure 2. Typical Li-ion Battery Charging Process

Once the battery voltage exceeds the 3.3V threshold, the CM9101 enters the Fast-charge, constant-current (CC) mode. The status pins will be set to STAT=0. During the CC mode, the charging current is limited by the

© 2006 California Micro Devices Corp. All rights reserved.

Application Information (cont'd)

maximum charging current, programmed with a single resistor between ISET and ground, R_{ISET}:

$$I_{FASTCHG(max)} = \frac{2.5V \times 1000}{R_{ISET}}$$

Most battery manufactures recommend an optimal charging current for their battery. This is typically a time ratio related to the battery capacity, with a value of .7C to 1C, once the battery is above the Precharge voltage level. For example, a 750mAh capacity battery with recommended charge of .7C could have I_{CC} set for about 525mA, with R_{ISET} equal to 4.75kΩ, 1%.

The actual Fast-charge current might be further limited by either the maximum chip temperature limit, determined by the power dissipation on the CM9101 chip, the ambient temperature (T_A), and the junction-to-ambient thermal resistance, $Rth_{(JA)}$.

When the battery terminal voltage, sensed at BSEN, approaches 4.2V, the CM9101 enters the Termination (CV) mode. The charger then regulates its output voltage at 4.20V, and the charging current gradually decreases as the battery's internal voltage, V_{OC}, rises toward 4.2V. The actual charging current is now determined by the differential voltage (4.20V – V_{OC}) and the internal impedance, $R_{internal}$, of the Li-ion battery-pack.

The CM9101 ends the charging process when Termination mode CV charging current drops below 5% of the Fast-charge (CC) mode current level. Once terminated, the charge current is completely stopped and no trickle charge is applied. Trickle (or float) charging is not required due to the minimal self-discharge of the Li-ion cells, and they are unable to absorb overcharge, which causes plating of metallic lithium and shortens the life of the battery.

Following the Termination mode, the charger will enter the Standby mode. The status pin will be set to STAT=V_{IN}.

If the wall adapter is left plugged-in while in the Standby mode, the charger will continue to monitor the battery voltage. It automatically re-charges the battery when the battery voltage drops below the re-charge threshold. When the adapter is removed, the CM9101 will drain less than 1µA from the battery.

Charging Current Foldback in the Over-temperature Condition

A limitation of linear chargers is that they are vulnerable to over-temperature conditions. The CM9101 will throttle down the charging current when the chip junction temperature reaches 105°C (with 10°C of hysteresis). This protects the charger IC and its nearby external components from excessive temperature.

The Charger IC junction temperature is determined by several factors in the following equation:

$$T_J = T_A + PD + Rth_{(JA)} \quad (1)$$

The $Rth_{(JA)}$ is usually determined by the IC package and the thermal resistance between the package and the PC board. In particular, a SMD IC package relies on the underlying PC board copper to move the heat away from the junction. The key to reducing the thermal resistance between the IC package and the underlying PC board is using a large copper (Cu) area for solder attach and a large ground plane underneath the charger IC to conduct the heat away.

The power dissipation (PD in equation 1) of a linear charger is the product of input-output voltage differential and output current.

$$PD = (V_{IN} - V_{OUT}) \times I_{OUT}$$

Highest power dissipation occurs when the battery at its lowest level (3.2V), when it just starts in the Fast-charge (CC) mode. Assuming V_{IN} = 5.0V, V_{BAT} = 3.2V, I_{CC} = 1A, the PD = (5V-3.2V) x 1A = 1.8W. Assuming $Rth_{(JA)}$ = 50°C/W, then -T = 1.8W x 50°C/W = 90°C. If the ambient temperature (T_A) is 35°C, then the junction temperature (T_J) could reach 125°C without over-temperature current foldback.

With over-temperature (OT) current foldback, the CM9101 will throttle down the charging current, allowing the junction temperature will reach steady-state equilibrium of 105°C, which translates into 1.4W of power dissipation, or 0.78A of charge current. As the battery voltage rises during charging, the allowable PD dissipation is increased. When the battery voltage reaches 3.6V, a full 1.0A of charging current is allowed.

© 2006 California Micro Devices Corp. All rights reserved.

Application Information (cont'd)

OTP and OCP

In addition to chip temperature regulation at 105°C, the CM9101 provides absolute over-temperature shutdown protection. In the case of a malfunctioning charger control, high ambient temperature or an unexpectedly high IC thermal resistance, $Rth_{(JA)}$ (for example; due to faulty soldering of the charger IC chip). The CM9101 provides an absolute OTP shutdown at junction temperature of 150°C.

Charging status

CM9101 provides a charging status indicator pin: STAT. This is an open-drain output, which can drive an LED directly, with up to 20mA of current sinking capability. Alternatively, the system supervisory microprocessor can monitor the battery charging status by interfacing with this pin, using a 100kΩ pull-up resistor. See Table 1.

CHARGE STATUS	STAT
Precharge in progress	Low -
Fast-charge in progress	Low -
Charge completed	High -
Charge suspended (including thermistor fault, OTP, OCP and ENA pulled low)	High -

Table 1: Charge Status for STAT

Thermistor interface

Li-ion batteries are prone to overheating when exposed to excess current or voltage. High heat, combined with the volatile chemical properties of lithium, can cause fire in some cases. The CM9101 provides a thermal interface for over-temperature protection, allowing safe charging of Li-ion cells.

For safety, manufacturers suggest suspending any charging above 45°C and below 10°C until the battery reaches the normal operating temperature range. Charging below freezing must be avoided because plating of lithium metal could occur. Battery capacity will be reduced if charged between 0°C and +10°C due to the inefficient charging process at low temperatures.

The CM9101 has incorporated a thermistor interface, responsible for the temperature control of the battery-pack through a negative temperature coefficient (NTC) thermistor attached near the battery-pack. The interface surveys the voltage on the THERM pin, which an input to a window comparator with thresholds associated with two battery-pack fault conditions;

Vtherm<1/2 x V_{IN} for Battery Hot

Vtherm>7/8 x V_{IN} for Battery Cold

To avoid oscillation near the Vtherm thresholds, both windows have an associated hysteresis of 200mV.

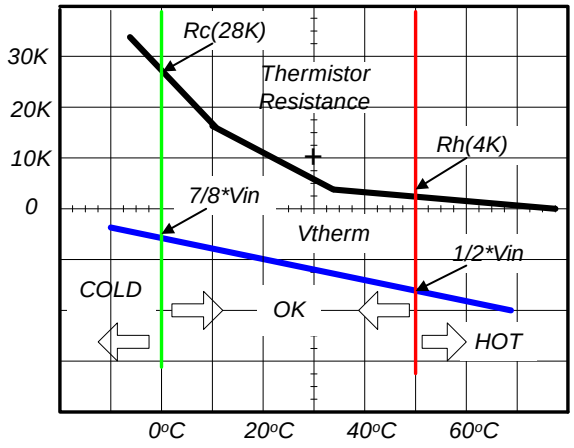

Figure 3. Vtherm Windows

If the voltage on the THERM pin either exceeds 7/8 x V_{IN}, or goes below 1/2 x V_{IN}, the CM9101 stops charging. The charging resumes only when the voltage on the THERM pin returns to within the window of 1/2 x V_{IN} to 7/8 x V_{IN}. Figure 3 illustrates these windows.

The thermistor interface consists of a thermistor connected between THERM pin and ground, and a resistor, Rtherm, connected between the THERM pin and V_{IN}, as shown in Figure 4. To determine the proper value for Rtherm, the thermistor used in the battery-pack should follow the 7:1 ratio on the Resistance vs. Temperature curve (for example, Vishay Dale's R-T Curve 2):

$$\frac{R_{COLD}(\text{at } 0°C)}{R_{HOT}(\text{at } 50°C)} = 7$$

© 2006 California Micro Devices Corp. All rights reserved.

Application Information (cont'd)

A thermistor with a room temperature value of about 10kΩ, or higher, will keep the interface current drain from V_{IN} low. Choose the Rtherm value equal to R_{hot}, with a 0.5% tolerance. A metal film resistor is best for temperature stability.

For example, a typically used thermistor for this application is Vishay Dale's NTHS0603N02N1002J. This thermistor has a R_{hot} (50°C) = 4kΩ and R_{cold} (0°C) = 28kΩ. The thermistor interface will work properly if Rtherm is 4.02kΩ, .5%. At 25°C the thermistor value is 10kΩ. Therefore, a value of voltage at the THERM pin will be:

$$Vtherm = \frac{10k\Omega}{14k\Omega} \times 5V = 3.57V \quad 25^{\circ}C$$

$$Vtherm = \frac{4k\Omega}{8k\Omega} \times 5V = 2.5V \quad 50^{\circ}C$$

$$Vtherm = \frac{28k\Omega}{32k\Omega} \times 5V = 4.375V \quad 0^{\circ}C$$

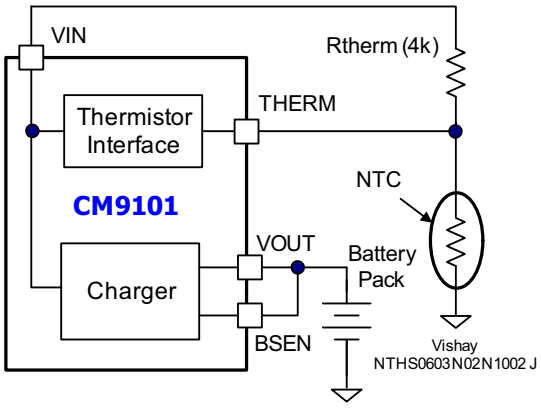

Figure 4. NTC Thermistor Interface

Because the thermistor is typically located on the battery-pack, removal of the battery-pack will remove the thermistor, and cause value of voltage at the THERM pin to go above the window and thus stop charging. This allows the THERM interface to function also as a battery present detector.

When using the CM9101 with a dummy battery, without a thermistor attached, this function can be disabled by connecting the THERM pin to GND. In this case, the THERM interface will never provide a fault condition to stop charge.

If there is no need for the thermistor interface, the THERM pin could be used as a second ENABLE pin for charging control. If the system has an additional control condition for stop charge, then the THERM pin could be used as a second control input. Connecting the THERM pin to V_{IN} will stop charging, while pulling to GND will resume charging.

Charging Control by the Host System

The CM9101 allows a host-system to take active control of the charging process by providing actual charging current monitoring via the 1000:1 current mirror on R_{ISET}. This is especially useful for the system's direct control of the Termination threshold (preset to 5% of CC mode level).

Mode Summary

Precharge mode is the typical charge starting mode for pre-conditioning a deeply discharged battery (<3.3V). A constant current of 10% of the programmed Fast-charge current is applied to raise the voltage safely above 3.3V.

Fast-charge mode is the constant current charging mode that applies most of the battery charge. A programmed constant current is applied to bring the battery voltage to 4.2V.

Termination mode is the final charging mode, where a constant voltage of 4.2V is applied to the battery until the charge current drops below 5% or the programmed Fast-charge current.

Standby mode is entered after a successful Termination mode and charging is done. Charging stops. In this mode, the battery is monitored, and when its voltage drops below the re-charge threshold, a new charge cycle begins.

Shutdown mode is triggered by a charging fault. These include THERM pin voltage outside the window (battery is too hot, too cold, or removed), Input current that exceeds 2.4A (OCP), the IC junction temperature

© 2006 California Micro Devices Corp. All rights reserved.

Application Information (cont'd)

exceeds 150°C (OTP). Pulling ENA low also puts the charger in Shutdown mode. Charging stops.

Sleep mode is entered when the Adapter is removed (or is the wrong voltage). Charging stops. In this mode, the CM9101 draws less than 1 µA of current from the battery.

Component Selection

The constant voltage AC Adapter must be selected carefully to minimize power losses and heat dissipation in the charger. The input supply should be between 5.0 and 6.0V. The lowest allowable input voltage will minimize heat dissipation and simplify the thermal design.

Layout Considerations

Because the internal thermal foldback circuit will limit the current when the IC reaches 105°C it is important to keep a good thermal interface between the IC and the PC board. It is critical that the exposed metal on the backside of the CM9101 be soldered to the PCB ground. The Cu pad should is large and thick enough to provided good thermal spreading.

Thermal vias to other Cu layers provide improved thermal performance.

V_{IN} and V_{OUT} are high current paths and the traces should be sized appropriately for the maximum current to avoid voltage drops. BSEN is the battery feedback voltage and should be connected with its trace as close to the battery as possible.

Typical Evaluation Circuit

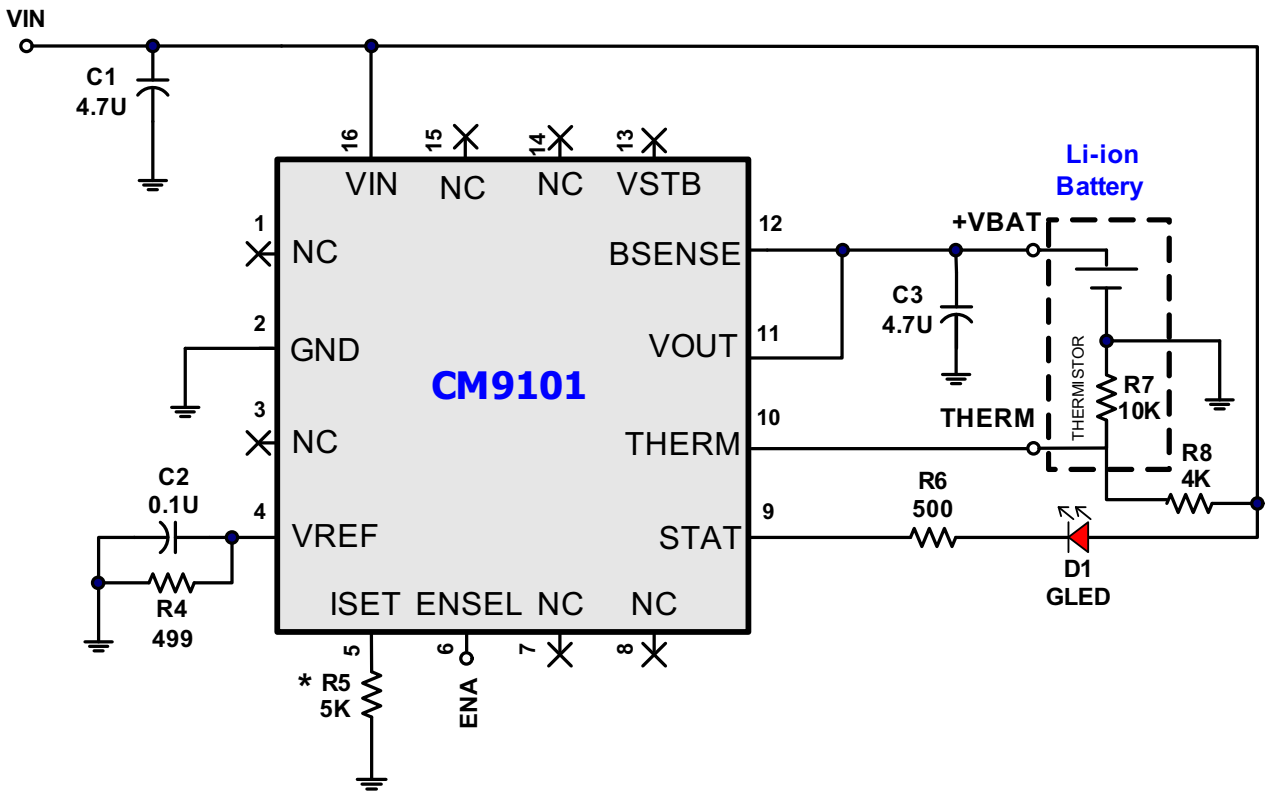

© 2006 California Micro Devices Corp. All rights reserved.

Mechanical Details

TQFN-16 Mechanical Specifications

The CM9101-00QE is supplied in a 16-lead, 4.0mm x 4.0mm TQFN package. Dimensions are presented below.

For complete information on the TQFN16, see the California Micro Devices TQFN Package Information document.

PACKAGE DIMENSIONS						
Package	TQFN-16 (4x4)					
Leads	16					
Dim.	**Millimeters**			**Inches**		
	Min	**Nom**	**Max**	**Min**	**Nom**	**Max**
A	0.07	0.75	0.80	0.28	0.030	0.031
A1	0.00		0.05	0.00		0.002
A3	0.20 REF			.008		
b	0.25	0.30	0.35	0.010	0.012	0.014
D	3.90	4.00	4.10	0.154	0.157	0.161
D1	1.95 REF			0.077		
D2	2.00	2.10	2.20	0.079	0.083	0.087
E	3.90	4.00	4.10	0.154	0.157	0.161
E1	1.95 REF			0.077		
E2	2.00	2.10	2.20	0.079	0.083	0.087
e	0.65 TYP.			0.026		
L	0.45	0.55	0.65	0.018	0.022	0.026
# per tape and reel	3000 pieces					
Controlling dimension: millimeters						

Mechanical Package Diagrams

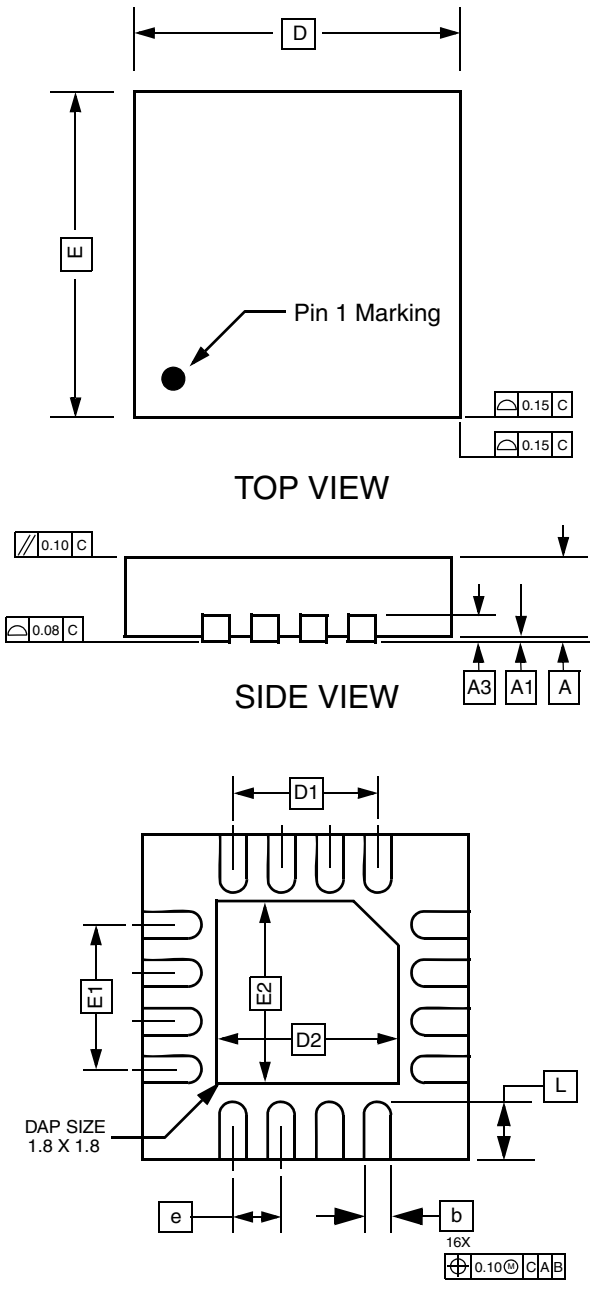

Package Dimensions for 16-Lead TQFN

© 2006 California Micro Devices Corp. All rights reserved.