MOTOROLA

SN54/74LS137

3-LINE TO 8-LINE DECODERS/DEMULTIPLEXERS WITH ADDRESS LATCHES

3-LINE TO 8-LINE DECODERS/DEMULTIPLEXERS WITH ADDRESS LATCHES

LOW POWER SCHOTTKY

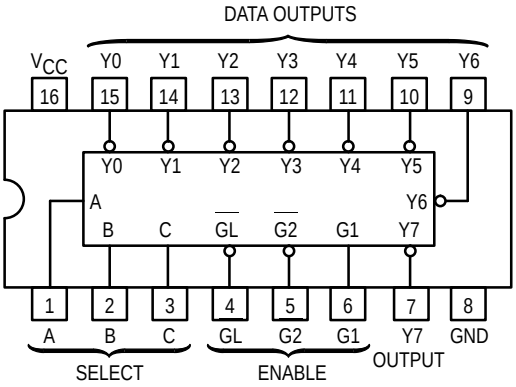

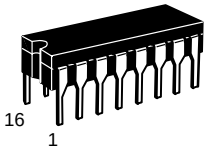

J SUFFIX
CERAMIC
CASE 620-09

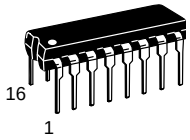

N SUFFIX
PLASTIC
CASE 648-08

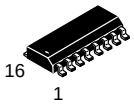

D SUFFIX
SOIC
CASE 751B-03

ORDERING INFORMATION

SN54LSXXXJ	Ceramic
SN74LSXXXN	Plastic
SN74LSXXXD	SOIC

GUARANTEED OPERATING RANGES

Symbol	Parameter		Min	Typ	Max	Unit
V_{CC}	Supply Voltage	54 74	4.5 4.75	5.0 5.0	5.5 5.25	V
T_A	Operating Ambient Temperature Range	54 74	–55 0	25 25	125 70	°C
I_{OH}	Output Current — High	54, 74			–0.4	mA
I_{OL}	Output Current — Low	54 74			4.0 8.0	mA

FUNCTION TABLE

INPUTS						OUTPUTS							
ENABLE			SELECT										
$\overline{GL}$	G1	$\overline{G2}$	C	B	A	Y0	Y1	Y2	Y3	Y4	Y5	Y6	Y7
X	X	H	X	X	X	H	H	H	H	H	H	H	H
X	L	X	X	X	X	H	H	H	H	H	H	H	H
L	H	L	L	L	L	L	H	H	H	H	H	H	H
L	H	L	L	L	H	H	L	H	H	H	H	H	H
L	H	L	L	H	L	H	H	H	H	H	H	H	H
L	H	L	L	H	H	H	H	L	H	H	H	H	H
L	H	L	H	L	L	H	H	H	H	L	H	H	H
L	H	L	H	L	H	H	H	H	H	H	L	H	H
L	H	L	H	H	L	H	H	H	H	H	H	L	H
L	H	L	H	H	H	H	H	H	H	H	H	H	L
H	H	L	X	X	X	Output corresponding to stored address, L; all others, H							

H = high level, L = low level, X = irrelevant

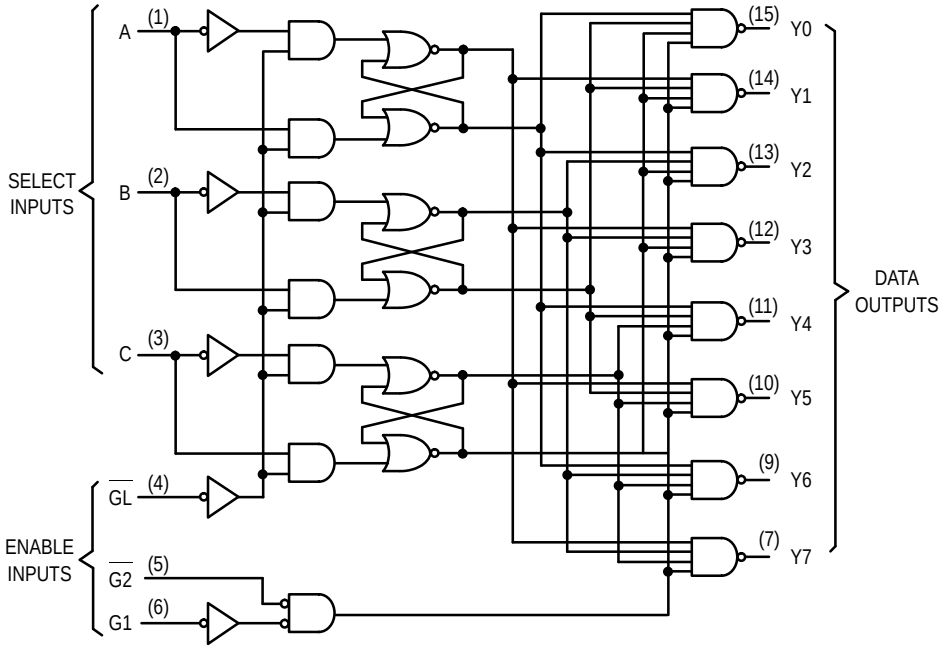

DC CHARACTERISTICS OVER OPERATING TEMPERATURE RANGE (unless otherwise specified)

Symbol	Parameter		Limits Min	Limits Typ	Limits Max	Unit	Test Conditions	
V_{IH}	Input HIGH Voltage		2.0			V	Guaranteed Input HIGH Voltage for All Inputs	
V_{IL}	Input LOW Voltage	54			0.7	V	Guaranteed Input LOW Voltage for All Inputs	
		74			0.8			
V_{IK}	Input Clamp Diode Voltage			–0.65	–1.5	V	V_{CC} = MIN, I_{IN} = –18 mA	
V_{OH}	Output HIGH Voltage	54	2.5	3.5		V	V_{CC} = MIN, I_{OH} = MAX, V_{IN} = V_{IH} or V_{IL} per Truth Table	
		74	2.7	3.5		V		
V_{OL}	Output LOW Voltage	54, 74		0.25	0.4	V	I_{OL} = 4.0 mA	V_{CC} = V_{CC} MIN, V_{IN} = V_{IL} or V_{IH} per Truth Table
		74		0.35	0.5	V	I_{OL} = 8.0 mA	
I_{IH}	Input HIGH Current				20	μA	V_{CC} = MAX, V_{IN} = 2.7 V	
					0.1	mA	V_{CC} = MAX, V_{IN} = 7.0 V	
I_{IL}	Input LOW Current				–0.4	mA	V_{CC} = MAX, V_{IN} = 0.4 V	
I_{OS}	Short Circuit Current (Note 1)		–20		–100	mA	V_{CC} = MAX	
I_{CC}	Power Supply Current				18	mA	V_{CC} = MAX	

Note 1: Not more than one output should be shorted at a time, nor for more than 1 second.

AC CHARACTERISTICS (V_{CC} = 5.0 V, T_A = 25°C)

Symbol	Parameter	Levels of Delay	Limits Min	Limits Typ	Limits Max	Unit	Test Conditions
t_{PLH} t_{PHL}	Propagation Delay Time, A, B, C to Y	2 4		11 25	17 38	ns	V_{CC} = 5.0 V C_L = 15 pF
t_{PLH} t_{PHL}	Propagation Delay Time, A, B, C to Y	3 3		16 19	24 29	ns	
t_{PLH} t_{PHL}	Propagation Delay Time, Enable $\overline{G2}$ to Y	2 2		13 16	21 27	ns	
t_{PLH} t_{PHL}	Propagation Delay Time, Enable G1 to Y	3 3		14 18	21 27	ns	
t_{PLH} t_{PHL}	Propagation Delay Time, Enable $\overline{GL}$ to Y	3 4		18 25	27 38	ns	

AC SETUP REQUIREMENTS (T_A = 25°C, V_{CC} = 5.0 V)

Symbol	Parameter	Limits Min	Limits Typ	Limits Max	Unit	Test Conditions
t_W	Pulse Width — Enable at $\overline{GL}$	15			ns	V_{CC} = 5.0 V
t_s	Setup Time, A, B, C	10			ns	
t_h	Hold Time, A, B, C	10			ns	