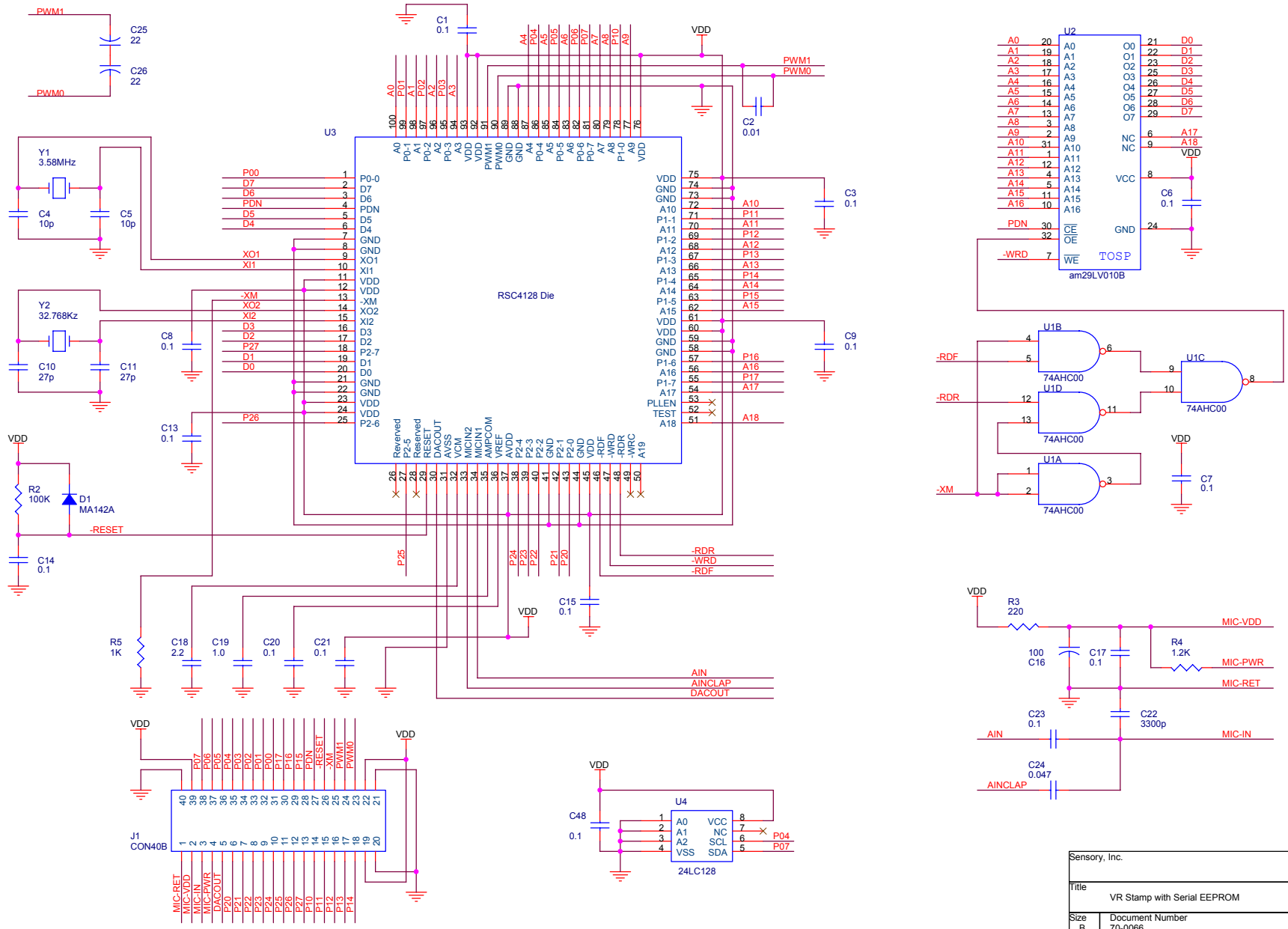

Sensory, Inc.

Title: VR Stamp with Serial EEPROM

Size	Document Number	Rev
B	70-0066	A

Date: Friday, January 21, 2005 Sheet 1 of 1