5mm SQUARE THIN TYPE ISOLATOR

MODEL ESI-5BB [ ] 0881 M 01 - T

(1) (2) (3) (4) (5) (6)

(1) Series ESI-5BB ; 2.0mm Height for 800MHz Band
(2) Rotating Direction (R or L)
(3) Center Frequency
(4) M ; MHz
(5) Control No.
(6) T ; Taping
Blank;Bulk

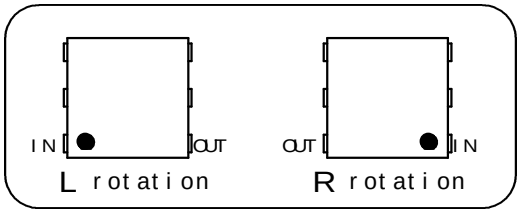

Specification

Frequency (MHz)	Ins. Loss Max. (dB)	Isolation Min. (dB)	V.S.W.R. Max.	Handling Power Max. (W)	Reflection Power Max. (W)
869-894	0.65	13	1.5	5.0	1.0

Operating Temperature(deg.C) ; -35 to +85
Impedance ; 50 ohms Typ.

Applicable to Pb free reflow soldering

Shape & Size

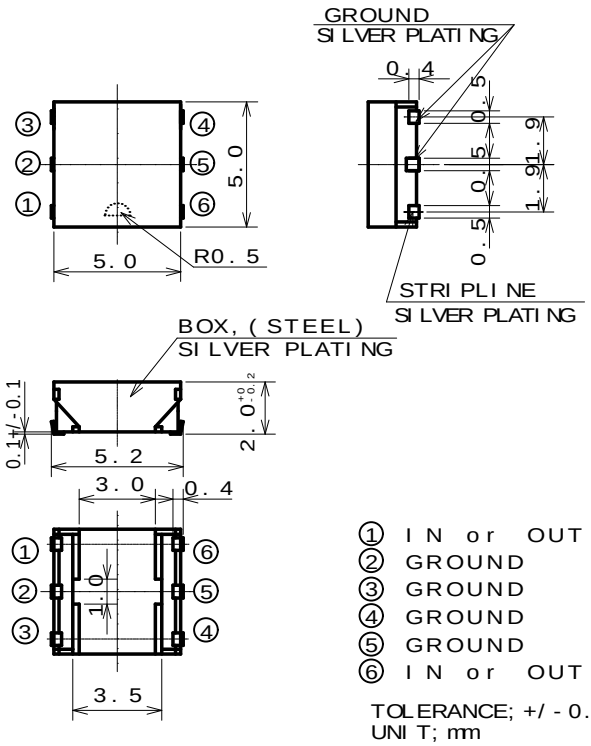

① IN or OUT
② GROUND
③ GROUND
④ GROUND
⑤ GROUND
⑥ IN or OUT

TOLERANCE; +/-0.2mm
UNIT; mm

Weight ; 0.2g

TAE993