JTM-2A Series QUADRAPHASE MODULATORS

10 to 1000 MHz / Integrated TTL Drivers / Low Conversion Loss / SMA Connectors

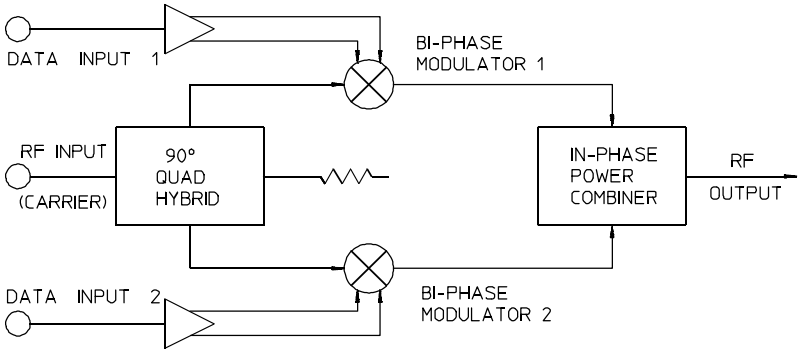

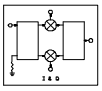

PRINCIPAL SPECIFICATIONS

Model Number	Center Freq, f_o, MHz	RF Input Bandwidth	Amplitude Balance, dB, Max.	Phase Balance @: f_o	Phase Balance @: Band Limits	Insertion Loss, dB, Max.	VSWR Max.
JTM-2A-***B	10 to 200	10% of f_o	0.5	±2°	±4°	6	1.5:1
JTM-2A-***B	200 to 1000	10% of f_o	1.0	±3°	±5°	9	1.5:1

For complete Model Number replace *** with desired Center Frequency, f_o in MHz.

A Package Outline

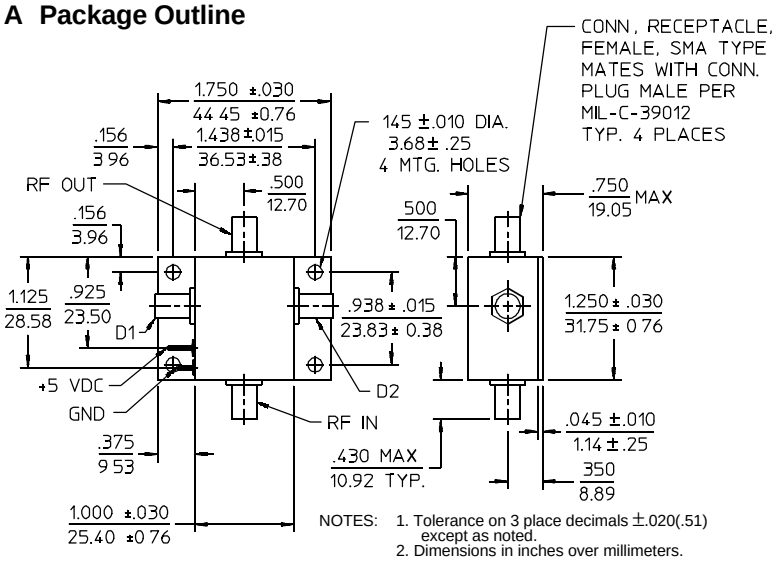

NOTES: 1. Tolerance on 3 place decimals ±.020(.51) except as noted.
2. Dimensions in inches over millimeters.

GENERAL SPECIFICATIONS

Impedance:	50 Ω nom.
RF Input Level:	0 dBm nom.
Modulation Sequence	
TTL Data Ports 1,2:	0,0 : ref. 0°
	1,0 : – 270°
	1,1 : – 180°
	0,1 : – 90°
Carrier Suppression:	30 dB nom.
Data Bandwidth:	DC to 50 MHz nom.
DC Power:	+5V @ 25 mA nom.
Weight, nominal:	2.2 oz (65 g)
Operating Temp:	– 55° to + 85°C

General Notes:

1. Units in the JTM-2A series of Quadraphase Modulators are composed of two biphase modulators with TTL drivers, a 90° quadrature hybrid and an inphase power combiner.

2. These devices are generally used in systems to generate QPSK coded signals. The units accept two differential data inputs each of which independently biphase modulates an RF carrier. These are then combined to produce a quadraphase output of 0, 90, 180 and 270 degrees.

3. Units in the JTM-2A series are available with center frequencies from 10 to 1000 MHz and having a minimum bandwidth equal to 10% of the center frequency.

4. Merrimac Quadraphase Modulators comply with the relevant sections of MIL-M-28837 and may be supplied screened for compliance with additional specifications for military and space applications requiring the highest reliability.

29Apr96

For further information contact ***MERRIMAC / 41 Fairfield Pl, West Caldwell, NJ, 07006 / 201-575-1300 / FAX 201-575-0531***