PCA ELECTRONICS INC.

10Base-T Isolation Transformer

EPE6045S & EPE6045S-RC

- Designed to work with 10Base-T Transceivers such as Level One's LXT901A and LXT907A
- Complies with or exceeds IEEE 802.3, 10Base- T Standards
- Add "-RC" after part number for RoHS Compliant
- Operating Temperature : 0°C to +70°C
- 1500 Vrms Isolation

Electrical Parameters @ 25° C

Primary Inductance (µH Min.)	**Interwinding Capacitance** (pF Max.)	**Leakage Inductance** (µH Max.)	**Insertion Loss** (dB Min.)	**Return Loss** (dB Min.)	**Crosstalk** (dB Min.)	**DCR** (Ω Max.)
@100KHz, 0.1 Vrms	@100KHz, 0.1 Vrms	@100KHz, 0.1 Vrms	@ 1-10 MHz	@ 5-10 MHz	@ 1-10 MHz	
140	12	0.2	-1	-18	-40	0.30
Pins 1-3 & 6-8	Xmit & Rcv	Pins 1-3 & 6-8	Xmit & Rcv	Xmit & Rcv	Xmit & Rcv	Pins 1-3 & 6-8

Package

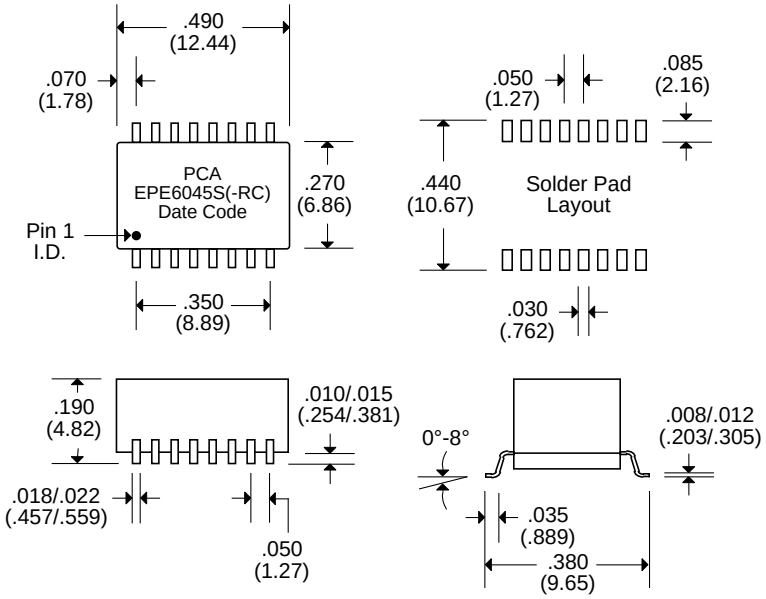

Schematic

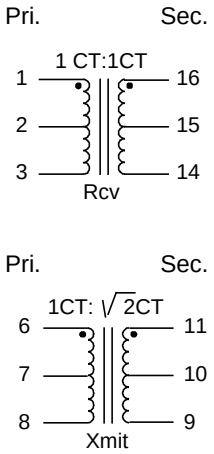

Notes :	**EPE6045S**	**EPE6045S-RC**
1. Lead Finish	SnPb	Hot Tin Dip (Sn) †
2. Peak Temperature Rating	225°C	245°C
3. Moisture Sensitive Levels	MSL = 3 (168 Hours, ≤30°C/60%RH)	MSL = 4 (72 Hours, ≤30°C/60%RH)
4. Weight	0.7 grams	0.7 grams
5. Packaging Information (Tube) (*Add "TR" to end of part number, but in front of "-RC"when placing order)	40 pieces/tube	40 pieces/tube
(Tape & Reel)	650 pieces/13" reel (*EPE6045STR)	650 pieces/13" reel (*EPE6045STR-RC)

† Hot tin dipped over Matte Tin with Ni Barrier

Unless Otherwise Specified Dimensions are in Inches /mm ± .010 /.25

PCA ELECTRONICS, INC.
16799 SCHOENBORN ST.
NORTH HILLS, CA 91343

Product performance is limited to specified parameters. Data is subject to change without prior notice.

CSE6045S & -RC Rev. B1 10/30/06 JDG

TEL: (818) 892-0761
FAX: (818) 894-5791
http://www.pca.com