140 MHz Bandpass SAW Filter

8 MHz Bandwidth

BP62190

Electrical Characteristics					
Parameter	Sym	Minimum	Typical	Maximum	Unit
Center Frequency at 25°C	fc	139.88	140.00	140.12	MHz
Insertion Loss at fc	IL	-	21.5	25.0	dB
1dB Bandwidth	BW_1	7.3	7.5	-	MHz
3dB Bandwidth	BW_3	8.0	8.1	-	MHz
40dB Bandwidth	BW_{40}	-	10.18	10.6	MHz
Passband Variation	-	-	0.7	1.0	dB
Phase Linearity	-	-	2.5	5.0	Deg
Absolute Delay	-	-	1.4	2.0	µsec
Ultimate Rejection	-	50	55	-	dB
Substrate Material	-	-	YZ-$LiNbO_3$	-	-
Ambient Temperature	Ta	-	25	-	°C
Operatable Temperature Range	To	-45	-	85	°C

Typical Performance

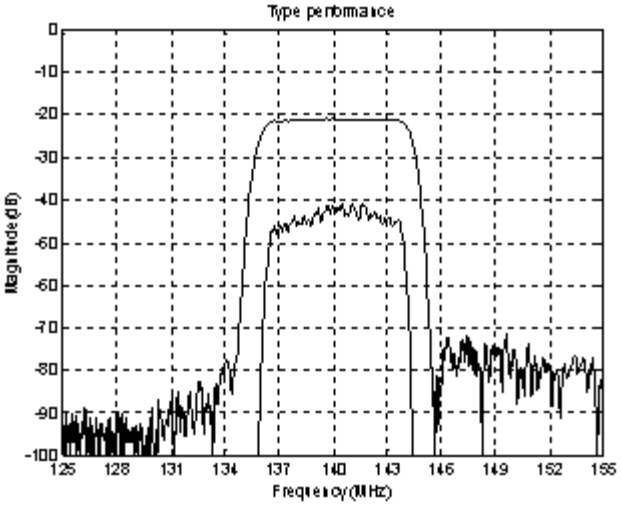

Package Outline

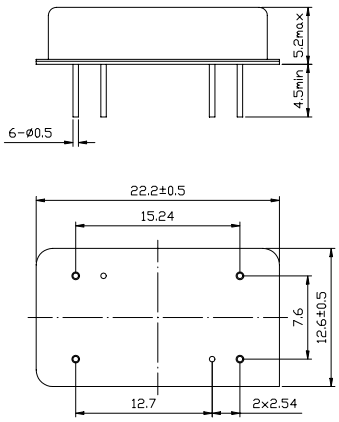

Matching Configuration

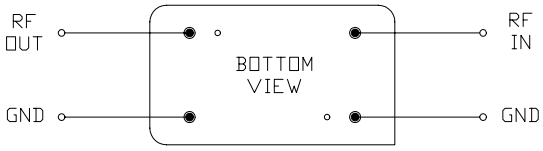

No Matching Required

Nominal Source/Load Impedance : 50 Ω

© 2004 by Vanlong Technology Co., Ltd.