SEMI-FIXED TRIMMERS
CI & LU Series: Cermet & Carbon

INTRODUCTION

CERMET
Metal glazed ceramic construction is suitable for circuit tuning where high temperature range & relative temperature stability is important.

CARBON
Carbon film semi-fixed resistors offer a very low cost alternative for circuit tuning where temperature stability is not a problem.

FEATURES

- Temperature Range -25°C to +100°C
- Temperature Coefficient 300ppm/°C
- Low Residual Resistance
- Low Cost

SPECIFICATIONS

Characteristics		Specifications (Cermet)	Specifications (Carbon)
Rated Wattage	6ϕ	0.2W @ 70°C	
	8ϕ	0.5W @ 70°C	0.1W @ 70°C
Resistance Range		100Ω ~ 1MΩ	100Ω ~ 2MΩ
Standard Tolerance		±20%	±20%
Resistance Taper		Linear B Curve	Linear B Curve
Residual Resistance		R ≤ 500, 5Ω max R > 500, 1% max	2% of overall or 10K max, 20Ω min.
Max Operating Voltage	6ϕ	100VDC	
	8ϕ	250VDC	100VDC
Temperature Range	6ϕ	-25°C ~ +100°C	
	8ϕ	-40°C ~ +100°C	-25°C ~ +70°C
Temperature Coefficient		±300ppm	
Total Rotation Angle		240° ±10°	270° ±20%
Rotational Torque		30 -300 g/cm	30-350 g/cm
Stopper Strength		300 g/cm min.	1kg/cm min.
Rotational Life		10% max, resistance change after 50 rotation cycles	100 Turns ±15% max.

CERMET DIMENSIONS 6ϕ (CI)

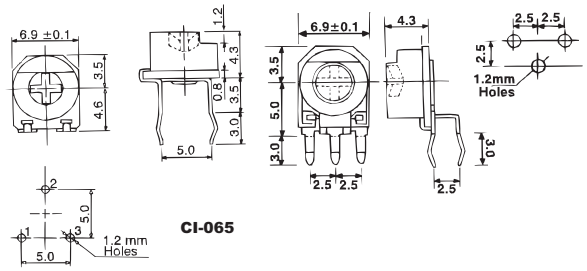

CARBON DIMENSIONS 8ϕ (LU)

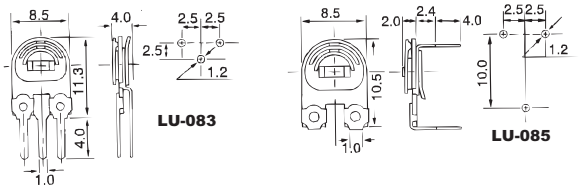

CERMET DIMENSIONS 8ϕ (CI)

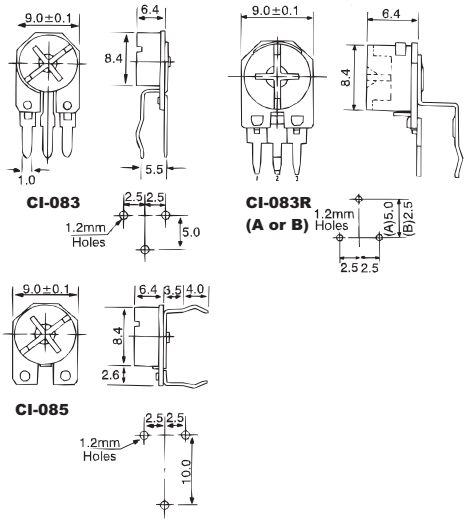

SHAFT OPTION FOR CERMET 8ϕ TYPE

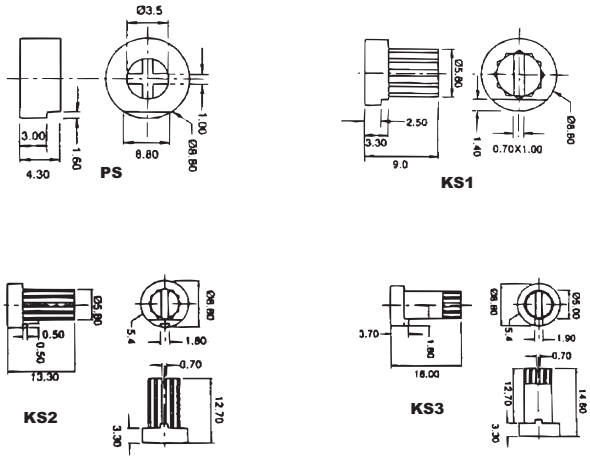

HOW TO MAKE A PART NUMBER

CI-065-KS1-10K-M

- Series Code
- Shaft Option
- Resistance
- Tolerance