CONNOR WINFIELD

AURORA, IL 60505
PHONE (630) 851-4722
FAX (630) 851-5040
www.conwin.com

CRYSTAL CONTROLLED OSCILLATORS

OSCILLATORS

14 PIN DIP
HIGH SPEED SINEWAVE

SPECIFICATIONS	SW51*	SW52*	SW53*	SW62*	SW63*
Frequency Range	100KHz to 150MHz				
Frequency Tolerance	±.0025%	±.005%	±.01%	±.005%	±.01%
Temperature Range	0°C to +70°C	0°C to +70°C	0°C to +70°C	-40°C to +85°C	-40°C to +85°C
Output * – (add suffix to model number)	Sinewave, AC Coupled T.H.D. <5%, 2% Typ				
	5	10dBm ±3dBm into a 50 ohms load			
	10	3Vrms ±1Vrms into a 10K ohms load			
Supply Voltage	+5Vdc ±10%				
Supply Current	100mA Maximum				
Package	All metal, hermetically sealed, welded package				

EXAMPLE MODEL NUMBER:

S W 5 2 1 0

Sinewave Series — ±.005% 0°C to +70°C — 3Vrms ±1Vrms 10K Ohm Load

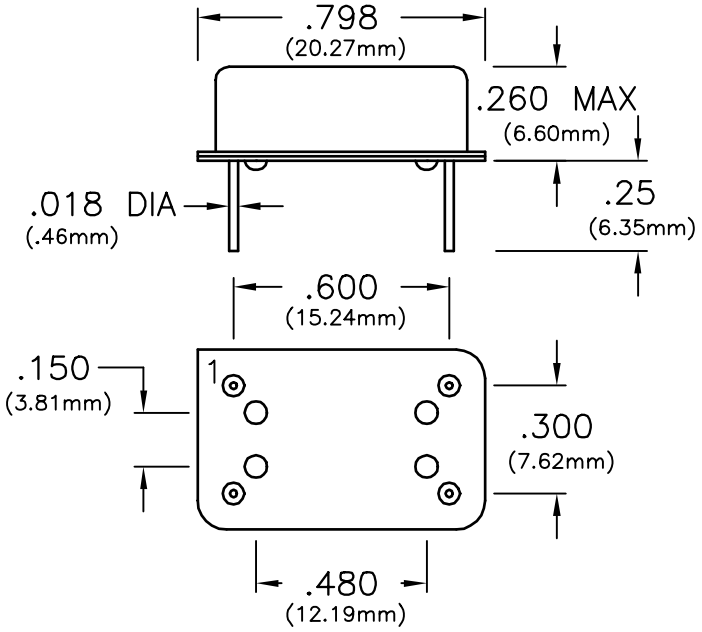

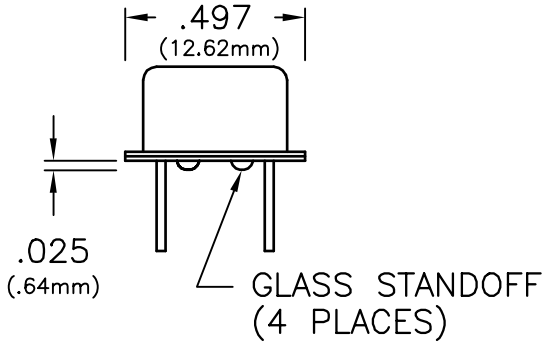

PIN	CONNECTION
1	N/C
7	GROUND (CASE)
8	OUTPUT
14	(+) SUPPLY

C-W © 2000