BOLYMIN

BL12896A

Feature

1. OLED Display 128 x 96 dots
2. Built-in controller SSD1329
3. +2.4~ +3.5V single power supply, with Built-in positive voltage
4. 1/96 duty cycle
5. Color: white or blue
6. Option: external positive voltage for LCD
7. Option: SPI interface

(blue) (white)

Mechanical Data

Item	Standard Value	Unit
Module Dimension	33.0 x 26.8	mm
Viewing Area	26.86 x 20.14	mm
Dot Size	0.19 x 0.19	mm
Dot Pitch	0.21 x 0.21	mm

Pin Assignment

Pin	Symbol	Function
1	Vss	Reset signal
2	Vdd	Data/Command select
3	CS	Write signal
4	RES	Read signal
5	D/C	Data bus
6	WR	Data bus
7	RD	Data bus
8~15	DB0~DB7	Data bus
16	DISPOFF/Vcc	Display OFF/power supply for LCD

Electronic Characteristics

Item	Symbol	Condition	Typical Value	Unit
Input Voltage	Vdd	Vdd = +3.3V	3.3	V
Supply Current	Idd	Vdd = +3.3V	155	mA
Life Time(blue)		60 cd/m^2	8,600	hrs
Life Time(white)		80 cd/m^2	16,000	hrs
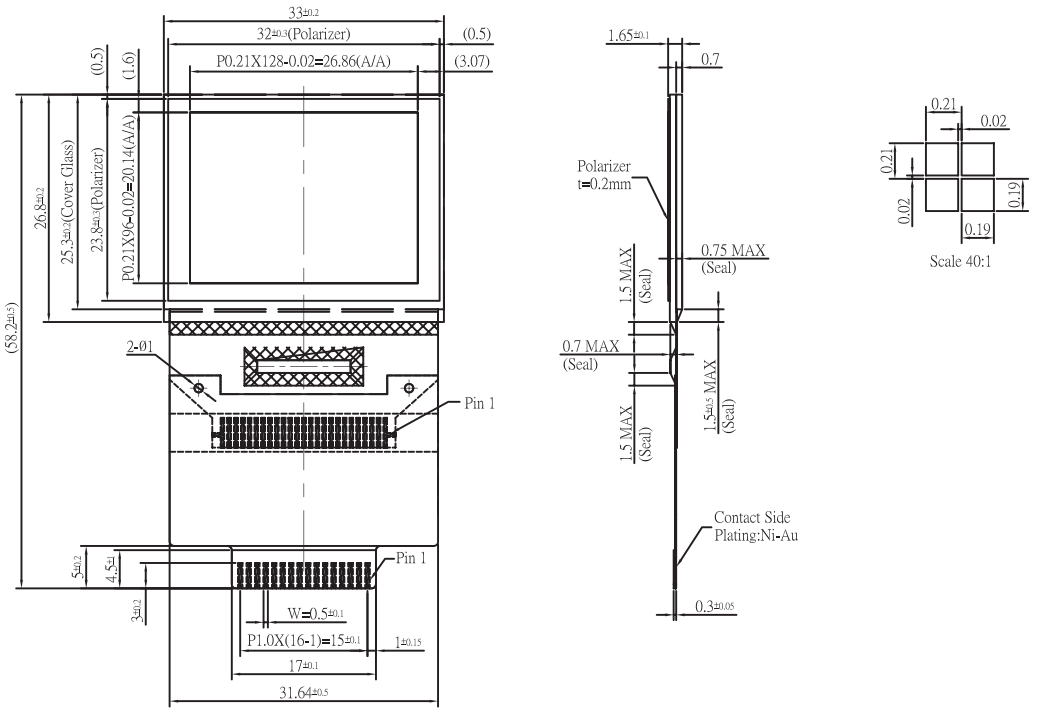
Dimension