SPECIFICATIONS		
PARAMETERS	VALUES	UNITS
RATED INPUT POWER	5	W
MAX INPUT POWER	8	W
IMPEDANCE	8 ± 15%	OHM
OUTPUT SPL @ 1W/0.5M (AT 0.6, 0.8, 1.0, 1.2 kHz)	86 ± 3	dBA
DISTORTION (MAX.)	5%	-
RESONANT FREQUENCY	240 ± 20%	Hz
FREQUENCY RANGE	240 ~ 18,000	Hz
HOUSING MATERIAL	METAL	-
CONE MATERIAL	TREATED PAPER	-
MAGNET MATERIAL	FERRITE	-
OPERATING TEMPERATURE	-20 ~ +55	°C
WEIGHT	128.44	grams

THIS DOCUMENT CONTAINS DATA PROPRIETARY TO PROJECTS UNLIMITED, INC. ANY USE OR REPRODUCTION, IN ANY FORM, WITHOUT PRIOR WRITTEN PERMISSION OF PROJECTS UNLIMITED, INC. IS PROHIBITED.
©2003, Projects Unlimited Inc.

REVISION HISTORY			
LTR	DESCRIPTION	DATE	APPROVED
-	RELEASED FROM ENGINEERING	8/16/2005	
A	REVISED MAGNET DIAMETER	12/19/2007	R.W.
B	REVISED HEIGHT & HOLE DIMENSIONS	1/29/2009	B.R.
C	REVISED TO INVENTOR 3-D DRAWING TEMPLATE	1/29/2009	B.R.

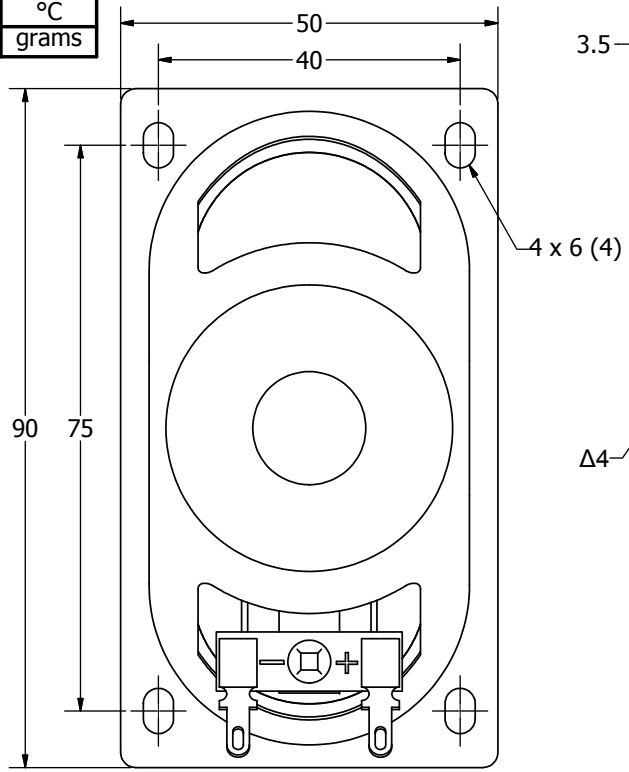

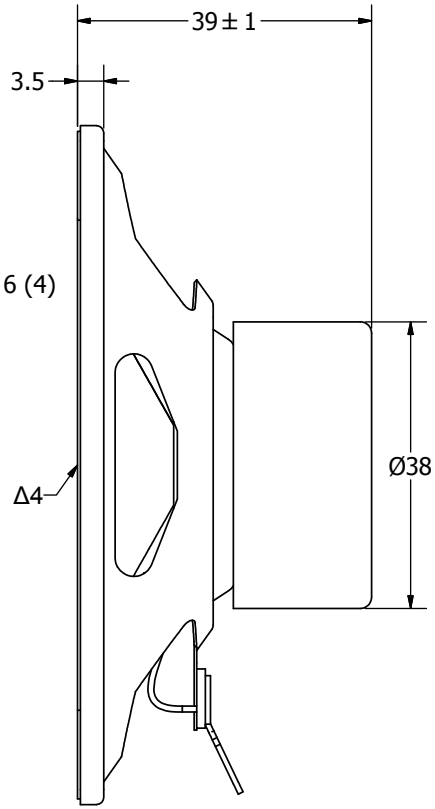

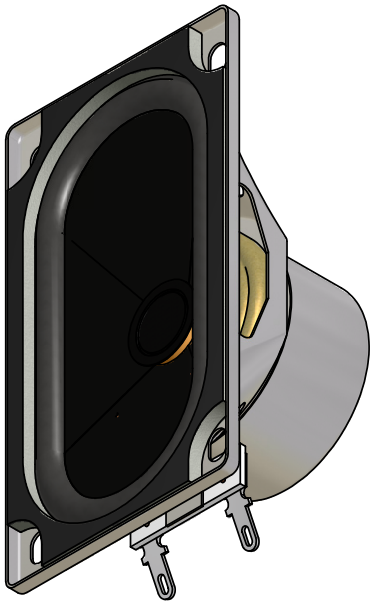

NOTES:

1. ALL DIMENSIONS ARE IN MILLIMETERS.
2. SPECIFICATIONS SUBJECT TO CHANGE OR WITHDRAWL WITHOUT NOTICE.
3. THIS PART IS RoHS 2002/95/EC COMPLIANT.

Δ4. CONE HAS BEEN TREATED FOR WATER RESISTANCE.

UNLESS OTHERWISE SPECIFIED: DIMENSIONS ARE IN MILLIMETERS, TOLERANCES ARE ±0.5 AND ANGLES ARE ±3°.	SIZE A3	Designed by	Date	Checked by	Date	Approved by	Date	Drawn Date
		J.A.F.	8/16/2005	B.R.	8/16/2005	E.P.	8/16/2005	1/29/2009

pui audio — A Division of Projects Unlimited

AS09008PO-2-WR-R

Speaker

Edition	Sheet
-	1 / 1

AS09008PO-2-WR-R.idw