REV.	DESCRIPTION	DATE
A	NEW DRAWING	7/17/2006

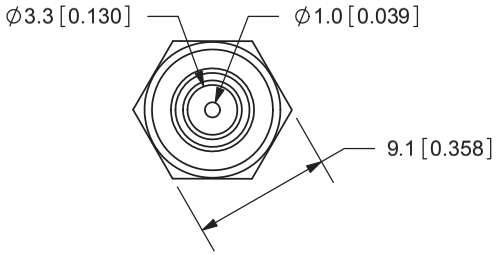

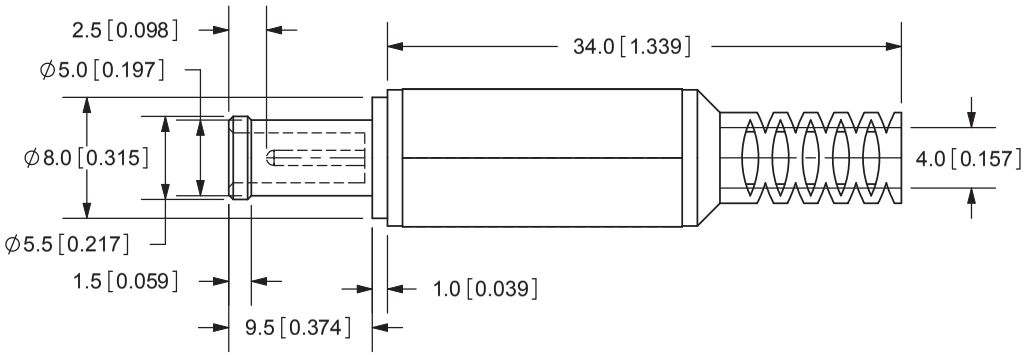

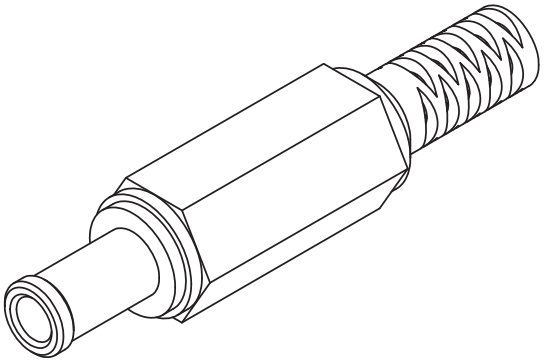

TOLERANCE:
X.X ±0.2mm
X.XX ±0.1mm
X.XXX ±0.05mm

RoHS

SPECIFICATIONS:
RATING: 24V DC @ 4A
INSULATION RESISTANCE: 100M OHMS MIN: 500V DC
VOLTAGE WITHSTAND: 500V AC R.M.S. FOR 1 MINUTE
LIFE: 5,000 CYCLES
OPERATING TEMP: 0° ~ +40°C

	MATERIAL	PLATING
COVER	PVC	Black Color
PIN	Brass	Nickel
BARREL	Brass	Nickel
TERMINALS	Brass	Nickel
TIP INSULATOR	POM	Yellow Color

CUI INC
20050 SW 112th Ave.
Tualatin, OR 97062
Phone: 503-612-2300
800-275-4899
Fax: 503-612-2383
Website: www.cui.com

TITLE: DC POWER PLUG		REV: A
PART NO. PP-015	UNITS: MM [INCHES]	
DRAWN BY: ZRJ	APPROVED BY:	SCALE: 2:1

PC FILE NAME: PP-015

COPYRIGHT 2007 BY CUI INC.