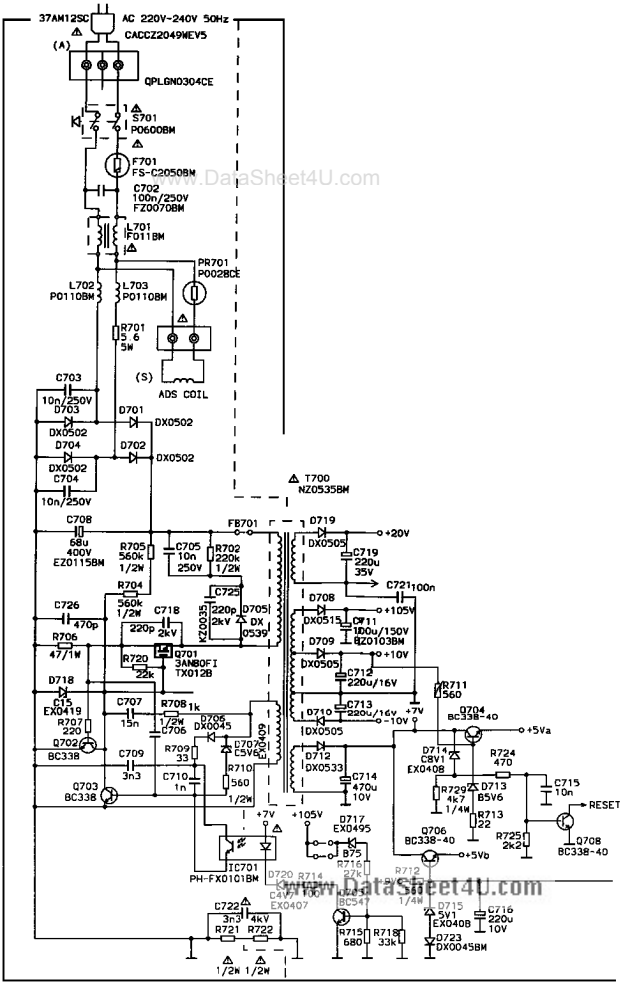

www.DataSheet4U.com