FINAL

Am27C040

4 Megabit (524,288 x 8-Bit) CMOS EPROM

Advanced Micro Devices

DISTINCTIVE CHARACTERISTICS

- **Fast access time**
  - 90 ns
- **Low power consumption**
  - 100 µA maximum CMOS standby current
- **JEDEC-approved pinout**
  - Plug in upgrade of 1 Mbit EPROM and 2 Mbit EPROMs
  - Easy upgrade from 28-pin JEDEC EPROMs
- **Single +5 V power supply**
- **±10% power supply tolerance standard on most speeds**
- **100% Flashrite™ programming**
  - Typical programming time of 1 minute
- **Latch-up protected to 100 mA from –1 V to Vcc + 1 V**
- **High noise immunity**
- **Compact 32-pin DIP, PDIP, LCC, and PLCC packages require no hardware change for upgrades to 8 Mbits**
- **DESC SMD No. 5962-91752**

GENERAL DESCRIPTION

The Am27C040 is a 4 Mbit ultraviolet erasable programmable read-only memory. It is organized as 512K words by 8 bits per word, operates from a single +5 V supply, has a static standby mode, and features fast single address location programming. Products are available in windowed ceramic DIP and LCC packages, as well as plastic one-time programmable (OTP) packages.

Typically, any byte can be accessed in less than 90 ns, allowing operation with high-performance microprocessors without any WAIT states. The Am27C040 offers separate Output Enable ($\overline{OE}$) and Chip Enable ($\overline{CE}$) controls, thus eliminating bus contention in a multiple bus microprocessor system.

AMD's CMOS process technology provides high speed, low power, and high noise immunity. Typical power consumption is only 100 mW in active mode, and 100 µW in standby mode.

All signals are TTL levels, including programming signals. Bit locations may be programmed singly, in blocks, or at random. The Am27C040 supports AMD's Flashrite programming algorithm (100 µs pulses) resulting in typical programming time of 1 minute.

BLOCK DIAGRAM

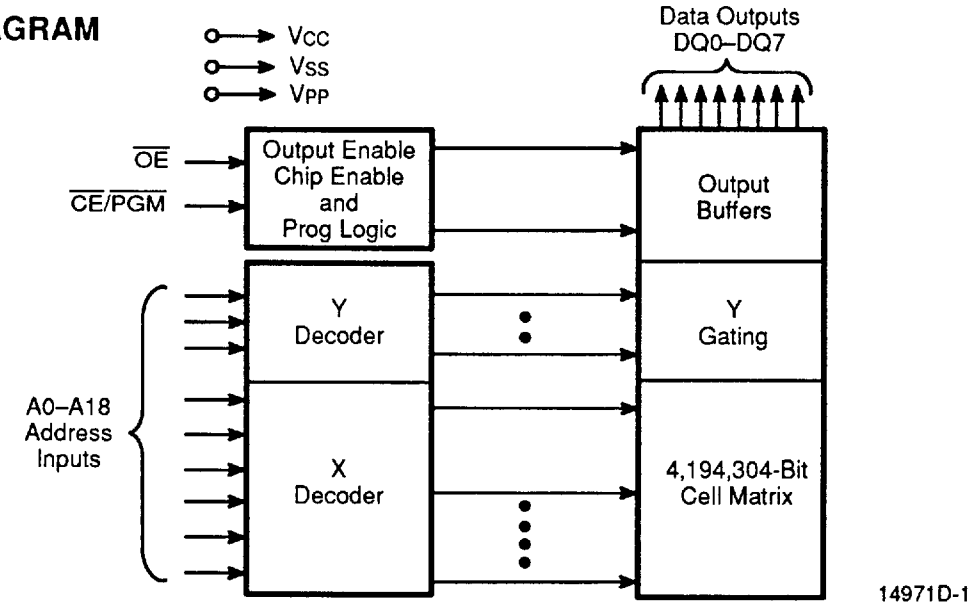

14971D-1

Publication# 14971 Rev. D Amendment/0
Issue Date: July 1994

PRODUCT SELECTOR GUIDE

Family Part No.	Am27C040					
Ordering Part No:						
V_{CC} ±5%	**-95**	—	—	—	—	**-255**
V_{CC} ±10%	—	**-100**	**-120**	**-150**	**-200**	**-250**
Max Access Time (ns)	90	100	120	150	200	250
$\overline{CE}$ ($\overline{E}$) Access (ns)	90	100	120	150	200	250
$\overline{OE}$ ($\overline{G}$) Access (ns)	40	40	50	65	75	75

CONNECTION DIAGRAMS

Top View

DIP

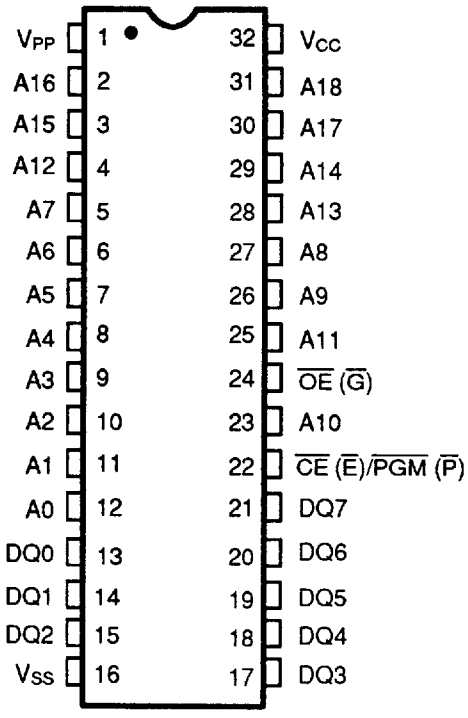

14971D-2

LCC/PLCC

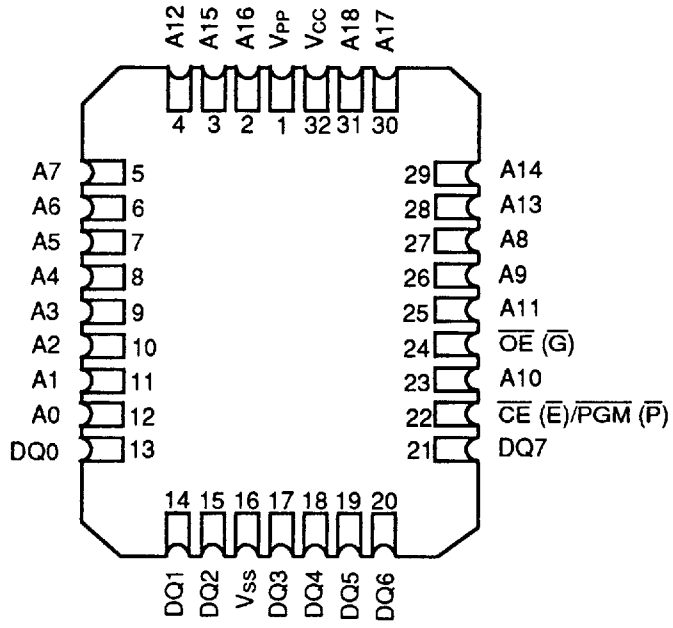

14971D-3

Notes:

1. *JEDEC nomenclature is in parentheses.*
2. *The 32-pin DIP to 32-pin LCC configuration varies from the JEDEC 28-pin DIP to 32-pin LCC configuration.*

PIN DESIGNATIONS

A0–A18	=	Address Inputs
$\overline{CE}$ ($\overline{E}$)/$\overline{PGM}$ ($\overline{P}$)	=	Chip Enable Input
DQ0–DQ7	=	Data Input/Outputs
$\overline{OE}$ ($\overline{G}$)	=	Output Enable Input
V_{CC}	=	V_{CC} Supply Voltage
V_{PP}	=	Program Input Voltage
V_{SS}	=	Ground

LOGIC SYMBOL

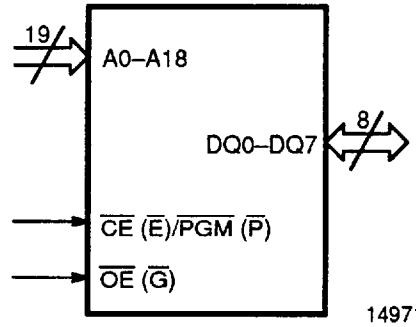

14971D-4

TSOP PACKAGE

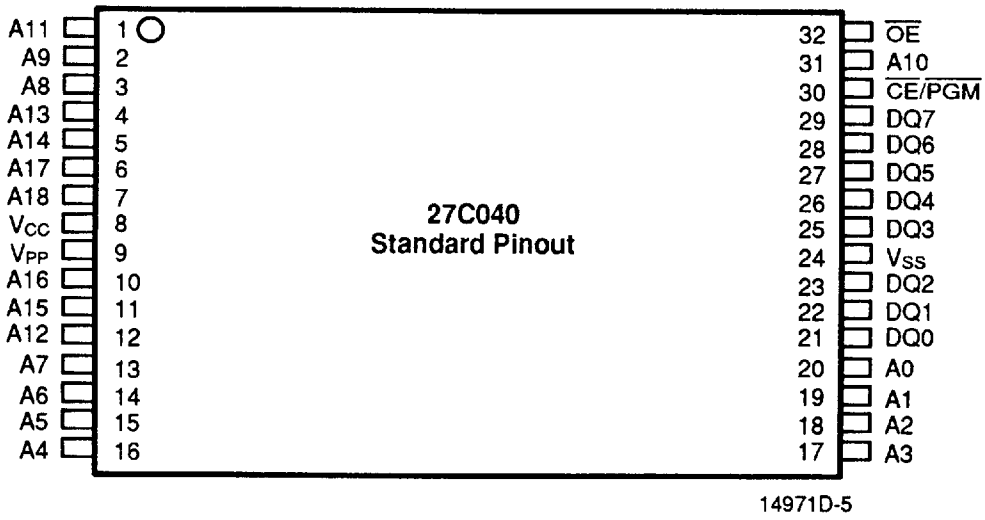

27C040 EPROM in 32 Lead TSOP

ORDERING INFORMATION

EPROM Products

AMD standard products are available in several packages and operating ranges. The order number (Valid Combination) is formed by a combination of:

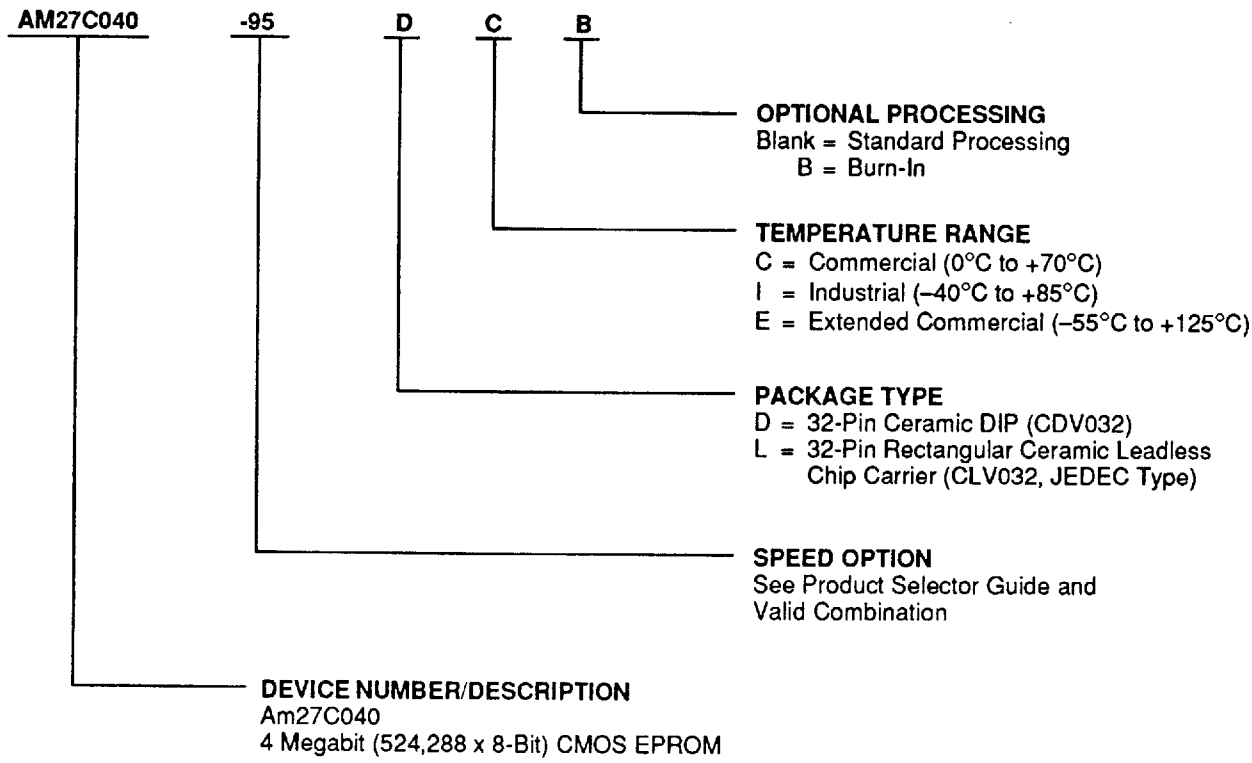

Valid Combinations	
AM27C040-95	DC
AM27C040-100	DC, DCB, DI, DIB, LC, LCB
AM27C040-120	DC, DCB, DE, DEB, DI, DIB, LC, LCB, LI, LIB, LE, LEB
AM27C040-150	
AM27C040-200	
AM27C040-255	

Valid Combinations

Valid Combinations list configurations planned to be supported in volume for this device. Consult the local AMD sales office to confirm availability of specific valid combinations and to check on newly released combinations.

ORDERING INFORMATION

OTP Products (Preliminary)

AMD standard products are available in several packages and operating ranges. The order number (Valid Combination) is formed by a combination of:

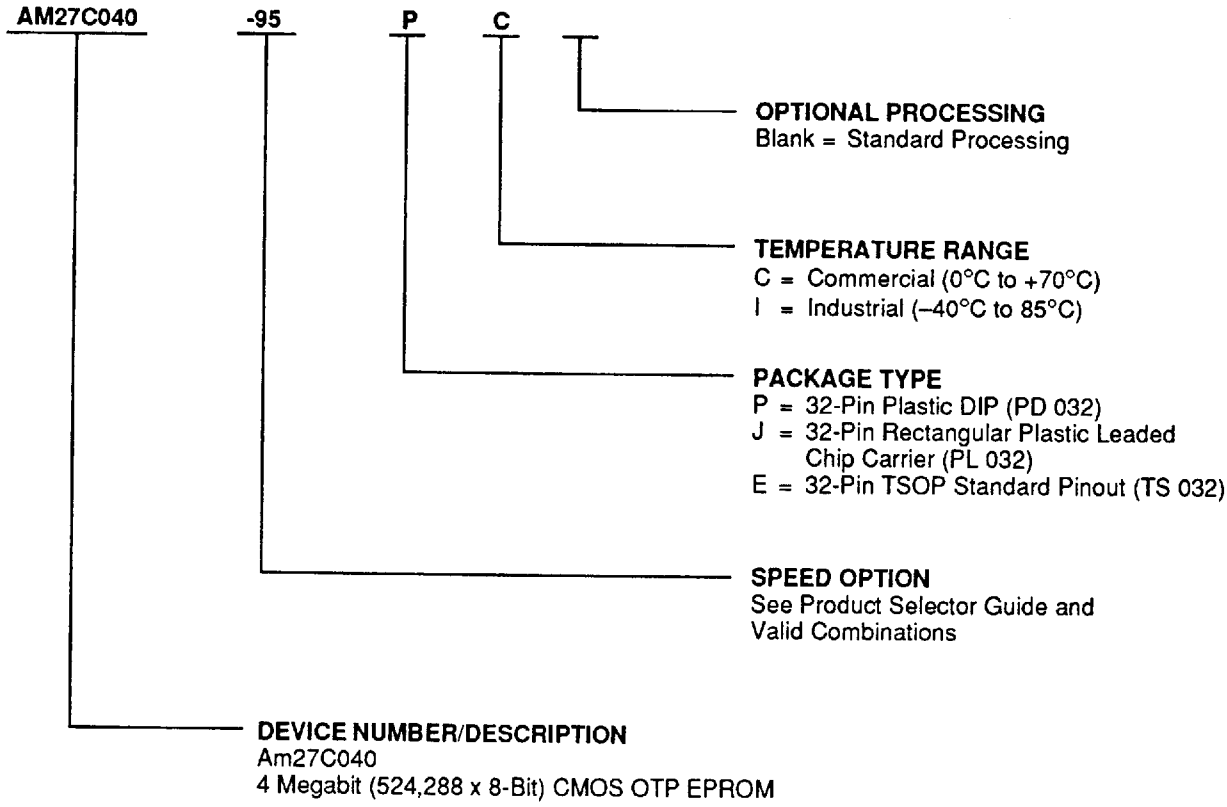

Valid Combinations	
AM27C040-95	PC, JC, EC
AM27C040-100	PC, JC, PI, JI, EC, EI
AM27C040-120	
AM27C040-150	
AM27C040-200	
AM27C040-250	

Valid Combinations

Valid Combinations list configurations planned to be supported in volume for this device. Consult the local AMD sales office to confirm availability of specific valid combinations and to check on newly released combinations.

MILITARY ORDERING INFORMATION

APL Products

AMD products for Aerospace and Defense applications are available in several packages and operating ranges. APL (Approved Products List) products are fully compliant with MIL-STD-883 requirements. The order number (Valid Combination) is formed by a combination of:

AM27C040 -120 /B X A

LEAD FINISH
A = Hot Solder Dip

PACKAGE TYPE
X = 32-Pin Ceramic DIP (CDV032)
U = 32-Pin Rectangular Ceramic Leadless Chip Carrier (CLV032)

DEVICE CLASS
/B = Class B

SPEED OPTION
See Product Selector Guide and Valid Combinations

DEVICE NUMBER/DESCRIPTION
Am27C040
4 Megabit (524,288 x 8-Bit) CMOS EPROM

Valid Combinations	
AM27C040-120	/BXA, /BUA
AM27C040-150	
AM27C040-200	
AM27C040-250	

Valid Combinations

Valid Combinations list configurations planned to be supported in volume for this device. Consult the local AMD sales office to confirm availability of specific valid combinations and to check on newly released combinations.

Group A Tests

Group A tests consist of Subgroups 1, 2, 3, 7, 8, 9, 10, 11.

FUNCTIONAL DESCRIPTION

Erasing the Am27C040

In order to clear all locations of their programmed contents, it is necessary to expose the Am27C040 to an ultraviolet light source. A dosage of 15 W seconds/cm^2 is required to completely erase an Am27C040. This dosage can be obtained by exposure to an ultraviolet lamp — wavelength of 2537 Å — with intensity of 12,000 µW/cm^2 for 15 to 20 minutes. The Am27C040 should be directly under and about one inch from the source and all filters should be removed from the UV light source prior to erasure.

It is important to note that the Am27C040, and similar devices, will erase with light sources having wavelengths shorter than 4000 Å. Although erasure times will be much longer than with UV sources at 2537Å, nevertheless the exposure to fluorescent light and sunlight will eventually erase the Am27C040 and exposure to them should be prevented to realize maximum system reliability. If used in such an environment, the package window should be covered by an opaque label or substance.

Programming the Am27C040

Upon delivery, or after each erasure, the Am27C040 has all 4,194,304 bits in the "ONE", or HIGH state. "ZEROs" are loaded into the Am27C040 through the procedure of programming.

The programming mode is entered when 12.75 V ± 0.25 V is applied to the V_{PP} pin, $\overline{CE}/\overline{PGM}$ is at V_{IL} and $\overline{OE}$ is at V_{IH}.

For programming, the data to be programmed is applied 8 bits in parallel to the data output pins.

The Flashrite algorithm reduces programming time by using 100 µs programming pulse and by giving each address only as many pulses as are necessary in order to reliably program the data. After each pulse is applied to a given address, the data in that address is verified. If the data does not verify, additional pulses are given until it verifies or the maximum is reached. This process is repeated while sequencing through each address of the Am27C040. This part of the algorithm is done at V_{CC} = 6.25 V to assure that each EPROM bit is programmed to a sufficiently high threshold voltage. After the final address is completed, the entire EPROM memory is verified at $V_{CC} = V_{PP}$ = 5.25 V.

Please refer to Section 6 for programming flow chart and characteristics.

Program Inhibit

Programming of multiple Am27C040s in parallel with different data is also easily accomplished. Except for $\overline{CE}/\overline{PGM}$, all like inputs of the parallel Am27C040 may be common. A TTL low-level program pulse applied to an Am27C040 $\overline{CE}/\overline{PGM}$ input with V_{PP} = 12.75 V ± 0.25 V, and $\overline{OE}$ HIGH will program that Am27C040. A high-level $\overline{CE}/\overline{PGM}$ input inhibits the other Am27C040s from being programmed.

Program Verify

A verify should be performed on the programmed bits to determine that they were correctly programmed. The verify should be performed with $\overline{OE}$ and $\overline{CE}/\overline{PGM}$ at V_{IL}, and V_{PP} between 12.5 V and 13.0 V.

Auto Select Mode

The auto select mode allows the reading out of a binary code from an EPROM that will identify its manufacturer and type. This mode is intended for use by programming equipment for the purpose of automatically matching the device to be programmed with its corresponding programming algorithm. This mode is functional in the 25°C ± 5°C ambient temperature range that is required when programming the Am27C040.

To activate this mode, the programming equipment must force 12.0 V ± 0.5 V on address line A9 of the Am27C040. Two identifier bytes may then be sequenced from the device outputs by toggling address line A0 from V_{IL} to V_{IH}. All other address lines must be held at V_{IL} during auto select mode.

Byte 0 (A0 = V_{IL}) represents the manufacturer code, and Byte 1 (A0 = V_{IH}), the device identifier code. For the Am27C040, these two identifier bytes are given in the Mode Select table. All identifiers for manufacturer and device codes will possess odd parity, with the MSB (DQ7) defined as the parity bit.

Read Mode

The Am27C040 has two control functions, both of which must be logically satisfied in order to obtain data at the outputs. Chip Enable ($\overline{CE}/\overline{PGM}$) is the power control and should be used for device selection. Output Enable ($\overline{OE}$) is the output control and should be used to gate data to the output pins, independent of device selection. Assuming that addresses are stable, address access time (t_{ACC}) is equal to the delay from $\overline{CE}/\overline{PGM}$ to output (t_{CE}). Data is available at the outputs t_{OE} after the falling edge of $\overline{OE}$, assuming that $\overline{CE}/\overline{PGM}$ has been LOW and addresses have been stable for at least $t_{ACC} - t_{OE}$.

Standby Mode

The Am27C040 has a CMOS standby mode which reduces the maximum V_{CC} current to 100 µA. It is placed in CMOS-standby when $\overline{CE}/\overline{PGM}$ is at $V_{CC} \pm 0.3$ V. The Am27C040 also has a TTL-standby mode which reduces the maximum V_{CC} current to 1.0 mA. It is placed in TTL-standby when $\overline{CE}/\overline{PGM}$ is at V_{IH}. When in standby mode, the outputs are in a high-impedance state, independent of the $\overline{OE}$ input.

Output OR-Tieing

To accommodate multiple memory connections, a two-line control function is provided to allow for:

- Low memory power dissipation
- Assurance that output bus contention will not occur

It is recommended that $\overline{CE}/\overline{PGM}$ be decoded and used as the primary device-selecting function, while $\overline{OE}$ be made a common connection to all devices in the array and connected to the READ line from the system control bus. This assures that all deselected memory devices are in their low-power standby mode and that the outut pins are only active when data is desired from a particular memory device.

System Applications

During the switch between active and standby conditions, transient current peaks are produced on the rising and falling edges of Chip Enable. The magnitude of these transient current peaks is dependent on the output capacitance loading of the device. At a minimum, a 0.1 µF ceramic capacitor (high frequency, low inherent inductance) should be used on each device between V_{CC} and V_{SS} to minimize transient effects. In addition, to overcome the voltage drop caused by the inductive effects of the printed circuit board traces on EPROM arrays, a 4.7 µF bulk electrolytic capacitor should be used between V_{CC} and V_{SS} for each eight devices. The location of the capacitor should be close to where the power supply is connected to the array.

MODE SELECT TABLE

Mode \ Pins		$\overline{CE}/\overline{PGM}$	$\overline{OE}$	A0	A9	V_{PP}	Outputs
Read		V_{IL}	V_{IL}	X	X	X	D_{OUT}
Output Disable		V_{IL}	V_{IH}	X	X	X	High Z
Standby (TTL)		V_{IH}	X	X	X	X	High Z
Standby (CMOS)		$V_{CC} \pm 0.3$ V	X	X	X	X	High Z
Program		V_{IL}	V_{IH}	X	X	V_{PP}	D_{IN}
Program Verify		V_{IL}	V_{IL}	X	X	V_{PP}	D_{OUT}
Program Inhibit		V_{IH}	X	X	X	V_{PP}	High Z
Auto Select (Note 3)	Manufacturer Code	V_{IL}	V_{IL}	V_{IL}	V_H	X	01H
	Device Code	V_{IL}	V_{IL}	V_{IH}	V_H	X	9BH

Notes:

1. *$V_H = 12.0$ V ± 0.5 V*
2. *X can be either V_{IL} or V_{IH}*
3. *A1–A8 = A10–A18 = V_{IL}*

ABSOLUTE MAXIMUM RATINGS

Storage Temperature:
OTP Products ..... −65°C to +125°C
All Other Products ..... −65°C to +150°C

Ambient Temperature
with Power Applied ..... −55°C to +125°C

Voltage with Respect to V_{SS}:
All pins except A9, V_{PP}, and
V_{CC} (Note 1) ..... −0.6 V to V_{CC} + 0.6 V

A9 and V_{PP} (Note 2) ..... −0.6 V to 13.5 V

V_{CC} ..... −0.6 V to 7.0 V

Notes:

1. *During transitions, the input may overshoot V_{SS} to −2.0 V for periods of up to 20 ns. Maximum DC voltage on input and I/O may overshoot to V_{CC} + 2.0 V for periods of up to 20 ns.*
2. *During transitions, A9 and V_{PP} may overshoot V_{SS} to −2.0 V for periods of up to 20 ns. A9 and V_{PP} must not exceed 13.5 V for any period of time.*

Stresses above those listed under Absolute Maximum Ratings may cause permanent device failure. Functionality at or above these limits is not implied. Exposure to absolute maximum ratings for extended periods may affect device reliability.

OPERATING RANGES

Commercial (C) Devices

Case Temperature (T_C) ..... 0°C to +70°C

Industrial (I) Devices

Case Temperature (T_C) ..... −40°C to +85°C

Extended Commercial (E) Devices

Case Temperature (T_C) ..... −55°C to +125°C

Military (M) Devices

Case Temperature (T_C) ..... −55°C to +125°C

Supply Read Voltages:

V_{CC} for Am27C040-XX5 ..... +4.75 V to +5.25 V
V_{CC} for Am27C040-XX0 ..... +4.50 V to +5.50 V

Operating ranges define those limits between which the functionality of the device is guaranteed.

DC CHARACTERISTICS over operating ranges unless otherwise specified (Notes 1, 3, and 4) (for APL products, Group A, Subgroups 1, 2, 3, 6, and 7 are tested unless otherwise noted)

Parameter Symbol	Parameter Description	Test Conditions		Min	Max	Unit
V_{OH}	Output HIGH Voltage	I_{OH} = –400 µA		2.4		V
V_{OL}	Output LOW Voltage	I_{OL} = 2.1 mA			0.45	V
V_{IH}	Input HIGH Voltage			2.0	V_{CC} + 0.5	V
V_{IL}	Input LOW Voltage			–0.5	+0.8	V
I_{LI}	Input Load Current	V_{IN} = 0 V to V_{CC}	C/I Devices		1.0	µA
			E/M Devices		5.0	
I_{LO}	Output Leakage Current	V_{OUT} = 0 V to V_{CC}			5.0	µA
I_{CC1}	V_{CC} Active Current (Note 3)	$\overline{CE}$ = V_{IL}, f = 10 MHz,	C/I Devices		30	mA
		I_{OUT} = 0 mA	E/M Devices		60	
I_{CC2}	V_{CC} TTL Standby Current	$\overline{CE}$ = V_{IH}			1.0	mA
I_{CC3}	V_{CC} CMOS Standby Current	$\overline{CE}$ = V_{CC} ± 0.3 V			100	µA
I_{PP1}	V_{PP} Current During Read	$\overline{CE}$ = $\overline{OE}$ = V_{IL}, V_{PP} = V_{CC}			100	µA

Notes:

1. *V_{CC} must be applied simultaneously or before V_{PP}, and removed simultaneously or after V_{PP}.*
2. ***Caution:** The Am27C040 must not be removed from (or inserted into) a socket when V_{CC} or V_{PP} is applied.*
3. *I_{CC1} is tested with $\overline{OE}$ = V_{IH} to simulate open outputs.*
4. *Minimum DC Input Voltage is –0.5 V. During transitions, the inputs may overshoot to –2.0 V for periods less than 20 ns. Maximum DC Voltage on output pins is V_{CC} + 0.5 V, which may overshoot to V_{CC} + 2.0 V for periods less than 20 ns.*

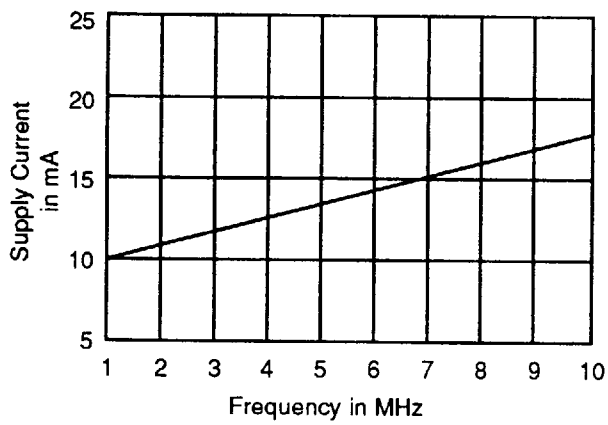

14971D-6

Figure 1. Typical Supply Current vs. Frequency
V_{CC} = 5.0 V, T = 25°C

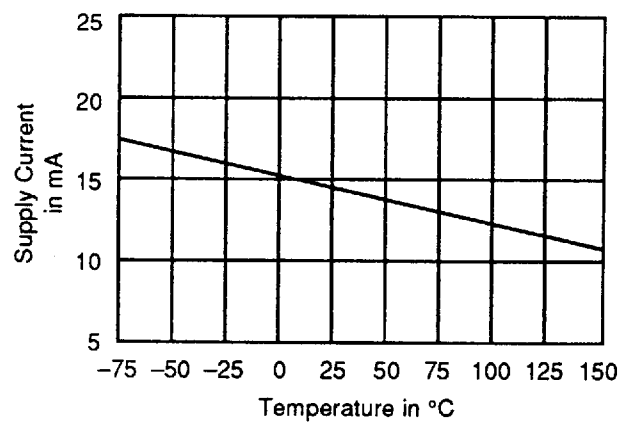

14971D-7

Figure 2. Typical Supply Current vs. Temperature
V_{CC} = 5.5 V, f = 5 MHz

CAPACITANCE

Parameter Symbol	Parameter Description	Test Conditions	CDV032		CLV032		PD 032		PL 032		TS 032		Unit
			Typ	Max	Typ	Max	Typ	Max	Typ	Max	Typ	Max	
C_{IN}	Input Capacitance	V_{IN} = 0 V	10	12	8	10	10	12	8	10	10	12	pF
C_{OUT}	Output Capacitance	V_{OUT} = 0 V	12	15	9	12	12	15	9	12	12	14	pF

Note:

1. *This parameter is only sampled and not 100% tested.*

SWITCHING CHARACTERISTICS over operating ranges unless otherwise specified (Notes 1, 3, and 4) (for APL products, Group A, Subgroups 9, 10, and 11 are tested unless otherwise noted)

Parameter Symbols		Parameter Description	Test Conditions		Am27C040						Unit
JEDEC	Standard				-95	-100	-120	-150	-200	-255 -250	
t_{AVQV}	t_{ACC}	Address to Output Delay	$\overline{CE} = \overline{OE} = V_{IL}$	Min							ns
				Max	95	100	120	150	200	250	
t_{ELQV}	t_{CE}	Chip Enable to Output Delay	$\overline{OE} = V_{IL}$	Min							ns
				Max	95	100	120	150	200	250	
t_{GLQV}	t_{OE}	Output Enable to Output Delay	$\overline{CE} = V_{IL}$	Min							ns
				Max	40	40	50	55	60	60	
t_{EHQZ} t_{GHQZ}	t_{DF} (Note 2)	Chip Enable HIGH or Output Enable HIGH, whichever comes first, to Output Float		Min		0	0	0	0	0	ns
				Max	30	30	30	30	40	60	
t_{AXQX}	t_{OH}	Output Hold from Addresses, $\overline{CE}$, or $\overline{OE}$, whichever occurred first		Min	0	0	0	0	0	0	ns
				Max	0						

Notes:

1. *V_{CC} must be applied simultaneously or before V_{PP}, and removed simultaneously or after V_{PP}.*
2. *This parameter is only sampled and not 100% tested.*
3. ***Caution**: The Am27C040 must not be removed from, or inserted into a socket or board when V_{PP} or V_{CC} is applied.*
4. *Output Load: 1 TTL gate and C_L = 100 pF,*
   Input Rise and Fall Times: 20 ns,
   Input Pulse Levels: 0.45 V to 2.4 V,
   Timing Measurement Reference Level—Inputs: 0.8 V and 2 V,
   Outputs: 0.8 V and 2 V

SWITCHING TEST CIRCUIT

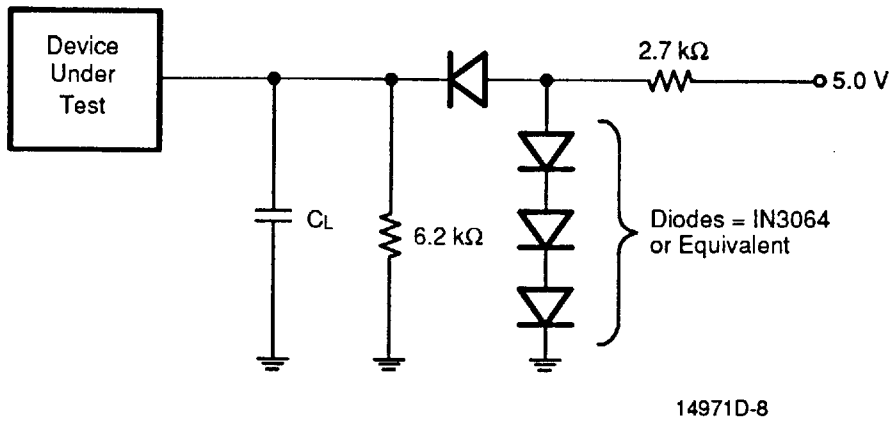

C_L = 100 pF including jig capacitance

SWITCHING TEST WAVEFORM

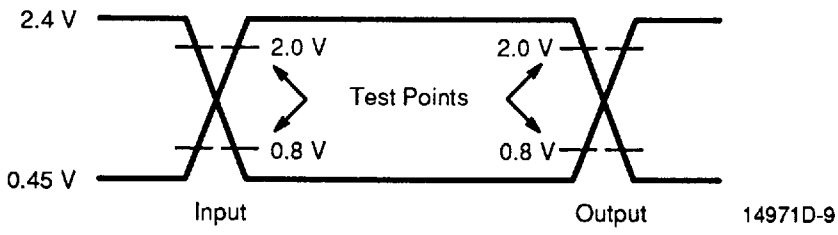

AC Testing: Inputs are driven at 2.4 V for a Logic "1" and 0.45 V for a Logic "0". Input pulse rise and fall times are ≤ 20 ns.

KEY TO SWITCHING WAVEFORMS

WAVEFORM	INPUTS	OUTPUTS
	Must Be Steady	Will Be Steady
	May Change from H to L	Will Be Changing from H to L
	May Change from L to H	Will Be Changing from L to H
	Don't Care, Any Change Permitted	Changing, State Unknown
	Does Not Apply	Center Line is High Impedance "Off" State

KS000010

SWITCHING WAVEFORM

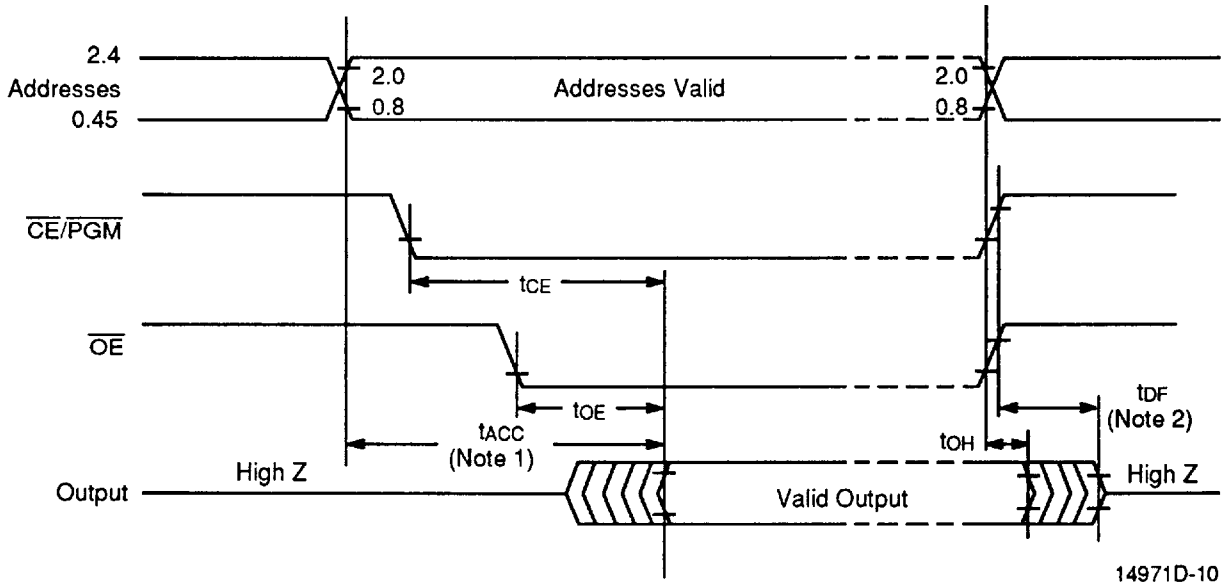

Notes:

1. *$\overline{OE}$ may be delayed up to $t_{ACC} - t_{OE}$ after the falling edge of the addresses without impact on t_{ACC}.*
2. *t_{DF} is specified from $\overline{OE}$ or $\overline{CE}$, whichever occurs first.*

PHYSICAL DIMENSIONS*

CDV032

32-Pin Ceramic Dual-In-Line Package with UV Lens (measured in inches)

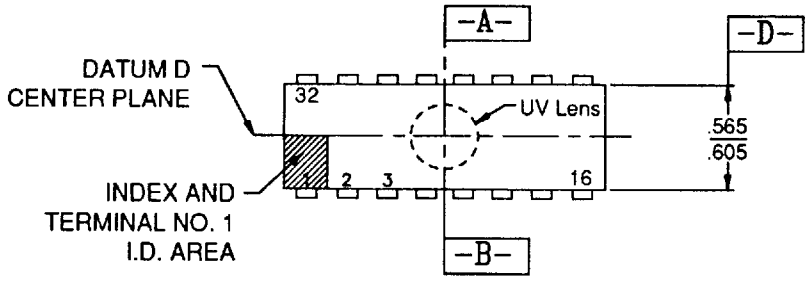

TOP VIEW

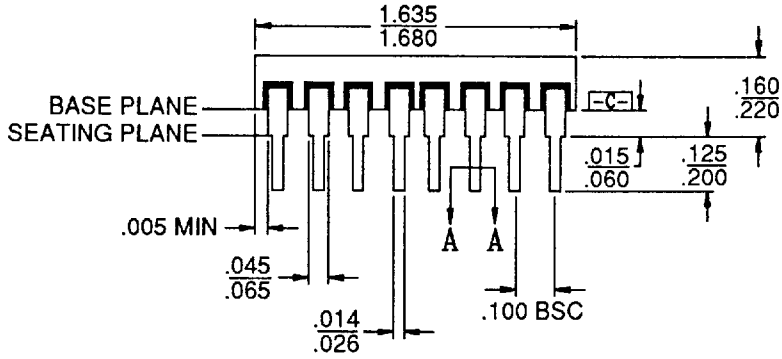

SIDE VIEW

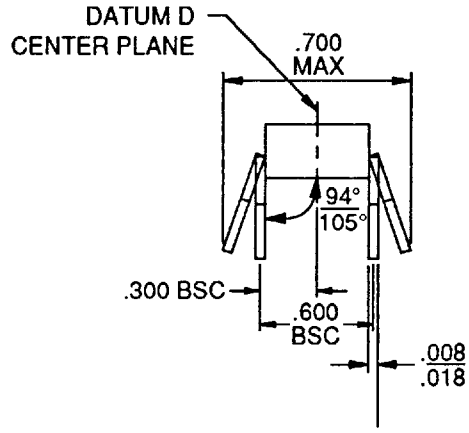

END VIEW

16-000038H-3
CDV032
DB11
6-17-94 ae

PHYSICAL DIMENSIONS*

CLV032

32-Pin Rectangular Ceramic Leadless Chip Carrier with UV Lens (measured in inches)

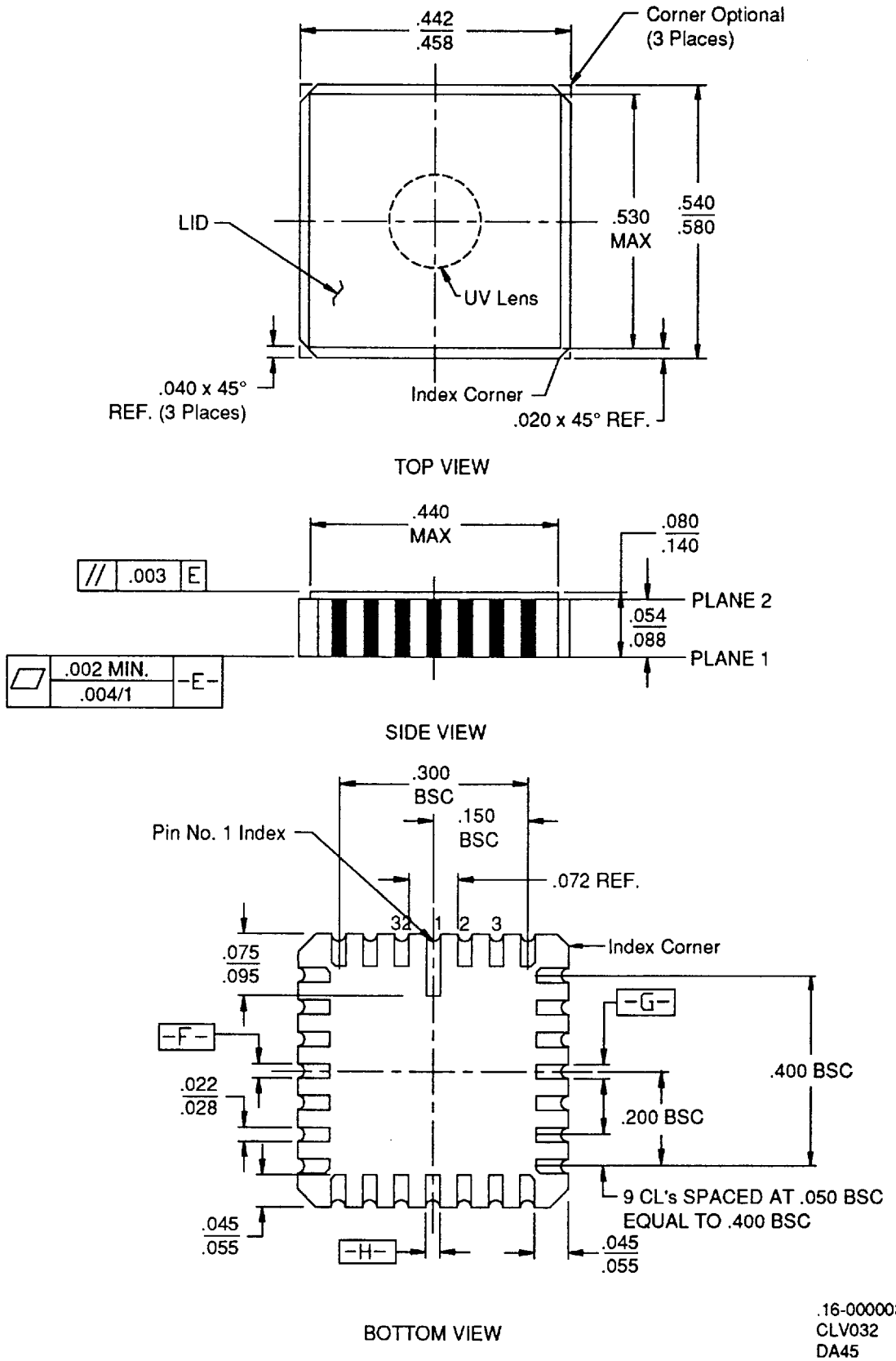

PHYSICAL DIMENSIONS*

PD 032
32-Pin Plastic Dual-In-Line Package (measured in inches)

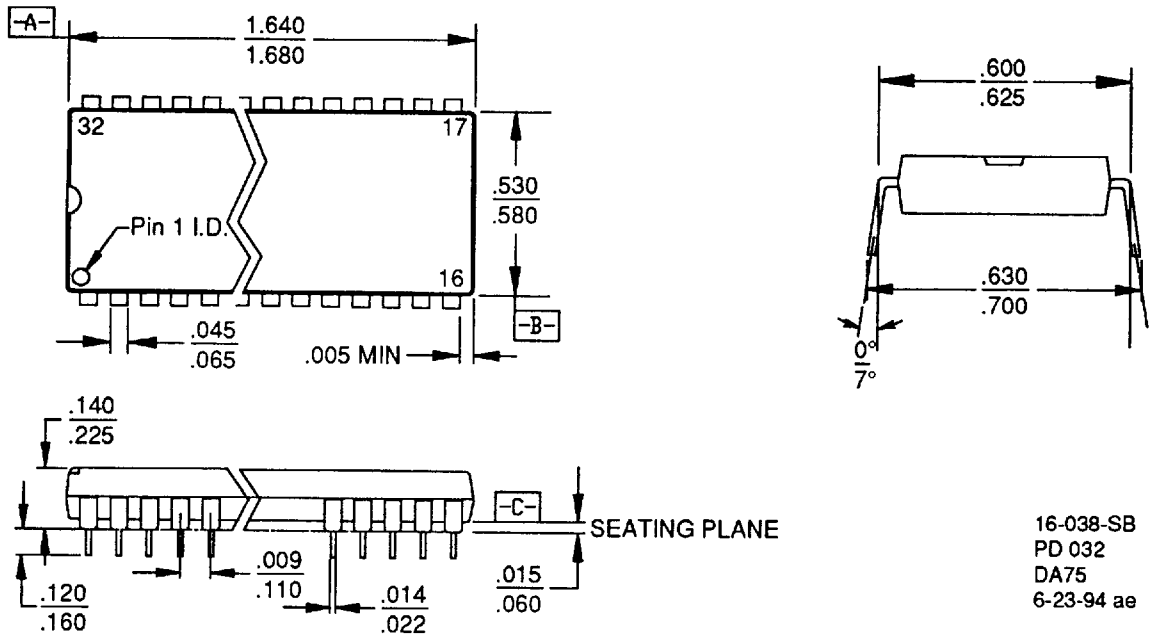

PL 032
32-Pin Plastic Leaded Chip Carrier (measured in inches)

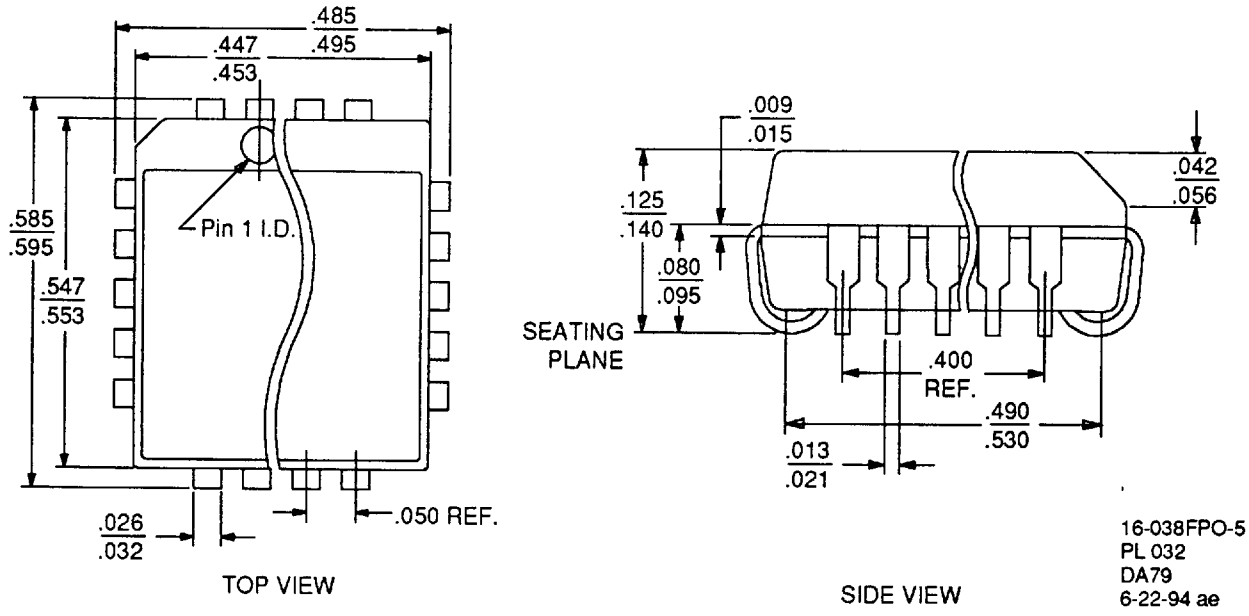

PHYSICAL DIMENSIONS*

TS 032

32-Pin Standard, Thin Small Outline (measured in millimeters)

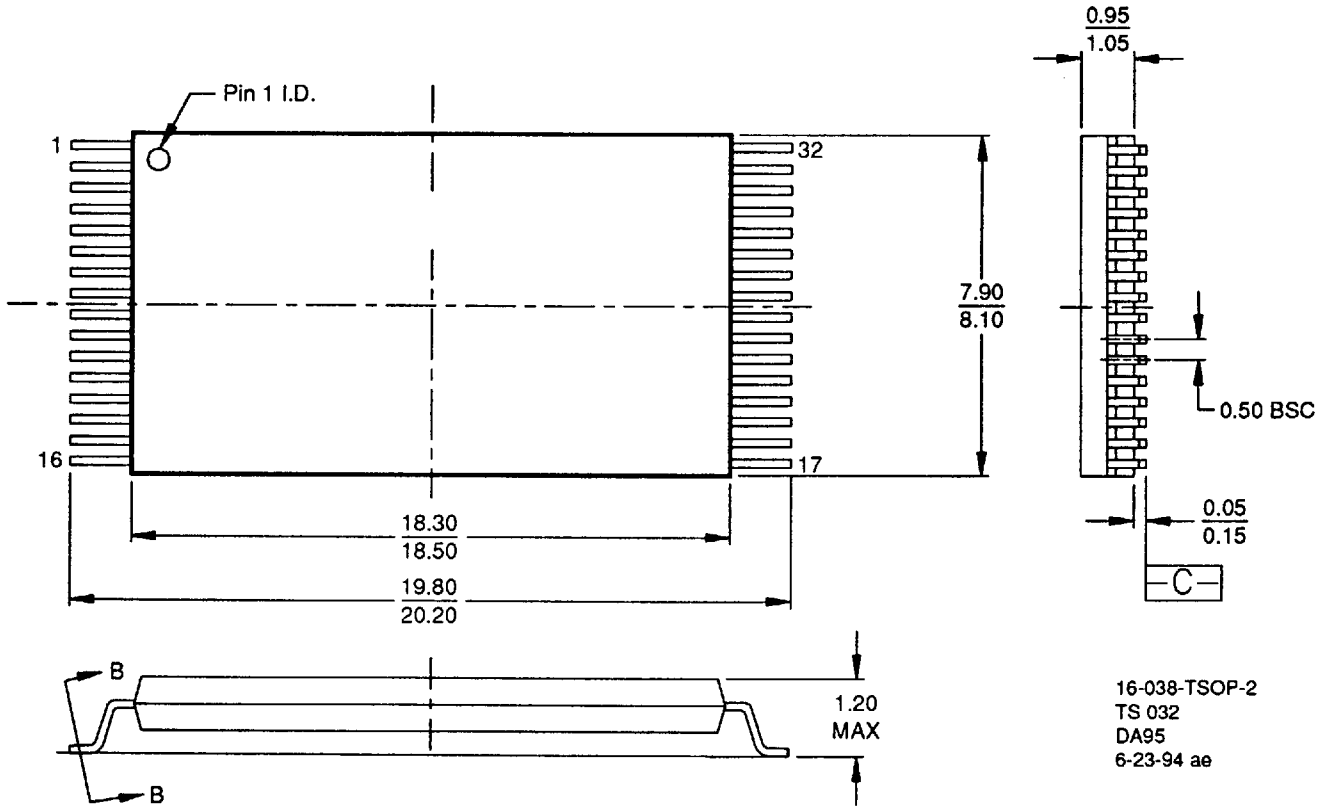

For reference only, not drawn to scale. BSC is an ANSI standard for Basic Space Centering.

Trademarks

Sales Offices

North American

ALABAMA	(205) 882-9122
ARIZONA	(602) 242-4400
CALIFORNIA,	
Culver City	(310) 645-1524
Newport Beach	(714) 752-6262
Sacramento(Roseville)	(916) 786-6700
San Diego	(619) 560-7030
San Jose	(408) 922-0500
Woodland Hills	(818) 878-9988
CANADA, Ontario,	
Kanata	(613) 592-0060
Willowdale	(416) 222-7800
COLORADO	(303) 741-2900
CONNECTICUT	(203) 264-7800
FLORIDA,	
Clearwater	(813) 530-9971
Boca Raton	(407) 361-0050
Orlando (Longwood)	(407) 862-9292
GEORGIA	(404) 449-7920
IDAHO	(208) 377-0393
ILLINOIS,	
Chicago (Itasca)	(708) 773-4422
Naperville	(708) 505-9517
MARYLAND	(301) 381-3790
MASSACHUSETTS	(617) 273-3970
MINNESOTA	(612) 938-0001
NEW JERSEY,	
Cherry Hill	(609) 662-2900
Parsippany	(201) 299-0002
NEW YORK,	
Brewster	(914) 279-8323
Rochester	(716) 425-8050
NORTH CAROLINA	
Charlotte	(704) 875-3091
Raleigh	(919) 878-8111
OHIO,	
Columbus (Westerville)	(614) 891-6455
Dayton	(513) 439-0268
OREGON	(503) 245-0080
PENNSYLVANIA	(215) 398-8006
TEXAS,	
Austin	(512) 346-7830
Dallas	(214) 934-9099
Houston	(713) 376-8084

International

BELGIUM, Antwerpen	TEL	(03) 248 43 00
	FAX	(03) 248 46 42
FRANCE, Paris	TEL	(1) 49-75-10-10
	FAX	(1) 49-75-10-13
GERMANY,		
Bad Homburg	TEL	(06172)-24061
	FAX	(06172)-23195
München	TEL	(089) 45053-0
	FAX	(089) 406490
HONG KONG,	TEL	(852) 865-4525
Wanchai	FAX	(852) 865-4335
ITALY, Milano	TEL	(02) 3390541
	FAX	(02) 38103458
JAPAN,		
Tokyo	TEL	(03) 3346-7550
	FAX	(03) 3342-5196
Osaka	TEL	(06) 243-3250
	FAX	(06) 243-3253
KOREA, Seoul	TEL	(82) 2-784-0030
	FAX	(82) 2-784-8014

International (Continued)

LATIN AMERICA,		
Ft. Lauderdale	TEL	(305) 484-8600
	FAX	(305) 485-9736
SINGAPORE	TEL	(65) 3481188
	FAX	(65) 3480161
SWEDEN,		
Stockholm area	TEL	(08) 98 61 80
(Bromma)	FAX	(08) 98 09 06
TAIWAN, Taipei	TEL	(886) 2-7153536
	FAX	(886) 2-7122183
UNITED KINGDOM,		
Manchester area	TEL	(0925) 830380
(Warrington)	FAX	(0925) 830204
London area	TEL	(0483) 740440
(Woking)	FAX	(0483) 756196

North American Representatives

CANADA	
Burnaby, B.C. – DAVETEK MARKETING	(604) 430-3680
Kanata, Ontario – VITEL ELECTRONICS	(613) 592-0060
Mississauga, Ontario – VITEL ELECTRONICS	(905) 564-9720
Lachine, Quebec – VITEL ELECTRONICS	(514) 636-5951
ILLINOIS	
Skokie – INDUSTRIAL REPRESENTATIVES,INC	(708) 967-8430
IOWA	
LORENZ SALES	(319) 377-4666
KANSAS	
Merriam – LORENZ SALES	(913) 469-1312
Wichita – LORENZ SALES	(316) 721-0500
MEXICO	
Chula Vista – SONIKA ELECTRONICA	(619) 498-8340
Guadalajara – SONIKA ELECTRONICA	(523) 647-4250
Mexico City – SONIKA ELECTRONICA	(523) 754-6480
Monterrey – SONIKA ELECTRONICA	(523) 358-9280
MICHIGAN	
Holland – COM-TEK SALES, INC	(616) 335-8418
Brighton – COM-TEK SALES, INC	(313) 227-0007
MINNESOTA	
Mel Foster Tech. Sales, Inc.	(612) 941-9790
MISSOURI	
LORENZ SALES	(314) 997-4558
NEBRASKA	
LORENZ SALES	(402) 475-4660
NEW MEXICO	
THORSON DESERT STATES	(505) 883-4343
NEW YORK	
East Syracuse – NYCOM, INC	(315) 437-8343
Hauppauge – COMPONENT CONSULTANTS, INC	(516) 273-5050
OHIO	
Centerville – DOLFUSS ROOT & CO	(513) 433-6776
Westlake – DOLFUSS ROOT & CO	(216) 899-9370
PENNSYLVANIA	
RUSSELL F. CLARK CO.,INC.	(412) 242-9500
PUERTO RICO	
COMP REP ASSOC, INC	(809) 746-6550
UTAH	
FRONT RANGE MARKETING	(801) 288-2500
WASHINGTON	
ELECTRA TECHNICAL SALES	(206) 821-7442
WISCONSIN	
Brookfield – INDUSTRIAL REPRESENTATIVES,INC	(414) 574-9393

Advanced Micro Devices, Inc. 901 Thompson Place, P.O. Box 3453, Sunnyvale, CA 94088, USA
Tel: (408) 732-2400 • TWX: 910-339-9280 • TELEX: 34-6306 • TOLL FREE: (800) 538-8450
APPLICATIONS HOTLINE & LITERATURE ORDERING • TOLL FREE: (800) 222-9323 • (408) 749-5703

CP-8.8M-7/94-0 4/7/94
14971D Printed in USA