Philips Components–Signetics

Document No.	853–0130
ECN No.	86487
Date of Issue	November 11, 1986
Status	Product Specification
Memory Products	

82S181 / 82S181A
8K-bit TTL bipolar PROM

DESCRIPTION

The 82S181 and 82S181A are field programmable, which means that custom patterns are immediately available by following the Signetics Generic I fusing procedure. The 82S181 and 82S181A are supplied with all outputs at logical Low. Outputs are programmed to a logic High level at any specified address by fusing the Ni-Cr link matrix.

This device includes on-chip decoding and four Chip Enable inputs for ease of memory expansion. It features 3-State outputs for optimization of word expansion in bused organizations.

Ordering information can be found on the following page.

The 82S181 and 82S181A devices are also processed to military requirements for operation over the military temperature range. For specifications and ordering information consult the Signetics Military Data Handbook.

FEATURES

- Address access time:
  - N82S181: 70ns max
  - N82S181A: 55ns max
- Power dissipation: 76µW/bit typ
- Input loading: –100µA max
- On-chip address decoding
- Four Chip Enable inputs
- Outputs: 3-State
- No separate fusing pins
- Unprogrammed outputs are Low level
- Fully TTL compatible

APPLICATIONS

- Prototyping/volume production
- Sequential controllers
- Microprogramming
- Hardwired algorithms
- Control store
- Random logic
- Code conversion

PIN CONFIGURATIONS

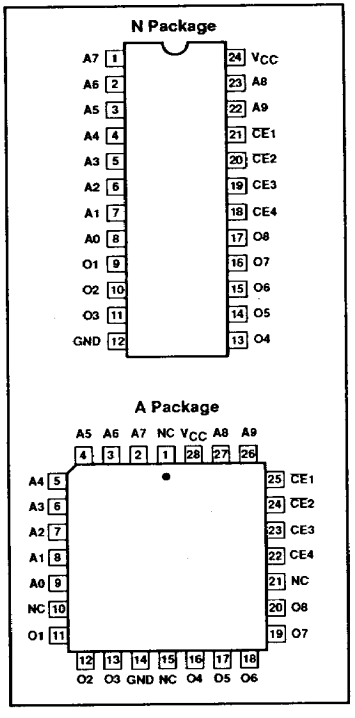

BLOCK DIAGRAM

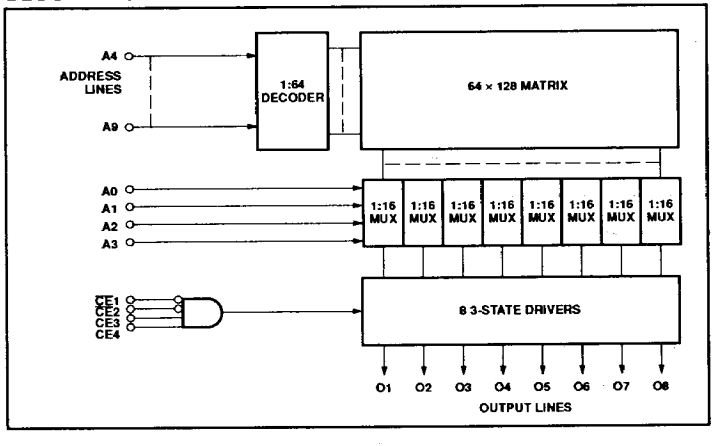

Powered by ICminer.com Electronic-Library Service CopyRight 2003

8K-bit TTL bipolar PROM (1024 × 8) 82S181 / 82S181A

ORDERING INFORMATION

DESCRIPTION	ORDER CODE
24-Pin Plastic Dual-In-Line 600mil-wide	N82S181 N, N82S181A N
28-Pin Plastic Leaded Chip Carrier 450mil-square	N82S181 A, N82S181A A

ABSOLUTE MAXIMUM RATINGS

SYMBOL	PARAMETER	RATING	UNIT
V_{CC}	Supply voltage	+7.0	V_{DC}
V_{IN}	Input voltage	+5.5	V_{DC}
V_O	Output voltage Off-State	+5.5	V_{DC}
T_{amb}	Operating temperature range	0 to +75	°C
T_{stg}	Storage temperature range	-65 to +150	°C

DC ELECTRICAL CHARACTERISTICS

$0°C \leq T_{amb} \leq +75°C$, $4.75V \leq V_{CC} \leq 5.25V$

SYMBOL	PARAMETER	TEST CONDITIONS[1,2]	LIMITS Min	LIMITS Typ[3]	LIMITS Max	UNIT
Input voltage[2]						
V_{IL}	Low				0.8	V
V_{IH}	High		2.0			V
V_{IC}	Clamp	I_{IN} = -12mA		-0.8	-1.2	V
Output voltage[2]						
		$\overline{CE}$1,2 = Low, CE3,4 = High				
V_{OL}	Low	I_{OUT} = 9.6mA			0.45	V
V_{OH}	High	I_{OUT} = -2.0mA	2.4			V
Input current[1]						
I_{IL}	Low	V_{IN} = 0.45V			-100	µA
I_{IH}	High	V_{IN} = 5.5V			40	µA
Output current[1]						
I_{OZ}	Hi-Z state	$\overline{CE}$1,2 = High, CE3,4 = Low, V_{OUT} = 5.5V			40	µA
		$\overline{CE}$1,2 = High, CE3,4 = Low, V_{OUT} = 0.5V			-40	µA
I_{OS}	Short circuit[4]	$\overline{CE}$1,2 = Low, CE3,4 = High, V_{OUT} = 0V High stored	-15		-70	mA
Supply current[5]						
I_{CC}		V_{CC} = 5.25V		125	175	mA
Capacitance						
		$\overline{CE}$1,2 = High, V_{CC} = 5.0V				
C_{IN}	Input	V_{IN} = 2.0V		5		pF
C_{OUT}	Output	V_{OUT} = 2.0V		8		pF

NOTES:
1. Positive current is defined as into the terminal referenced.
2. All voltages with respect to network ground.
3. Typical values are at V_{CC} = 5V, T_{amb} = +25°C.
4. Duration of the short circuit should not exceed 1 second.
5. Measured with all inputs grounded and all outputs open.

Powered by ICminer.com Electronic-Library Service CopyRight 2003

8K-bit TTL bipolar PROM (1024 × 8) 82S181 / 82S181A

AC ELECTRICAL CHARACTERISTICS

$R_1 = 470\Omega$, $R_2 = 1k\Omega$, $C_L = 30pF$, $0°C \leq T_{amb} \leq +75°C$, $4.75V \leq V_{CC} \leq 5.25V$

SYMBOL	PARAMETER	TO	FROM	N82S181			N82S181A			UNIT
				Min	Typ[1]	Max	Min	Typ[1]	Max	
Access time[2]										
t_{AA}		Output	Address		50	70		45	55	ns
t_{CE}		Output	Chip Enable		25	40		25	40	ns
Disable time[3]										
t_{CD}		Output	Chip Disable		25	40		25	40	ns

NOTES:
1. Typical values are $V_{CC} = 5V$, $T_{amb} = +25°C$.
2. Tested at an address cycle time of 1μs.
3. Measured at a delta of 0.5V from Logic Level with $R_1 = 750\Omega$, $R_2 = 750\Omega$ and $C_L = 5pF$.

TEST LOAD CIRCUIT

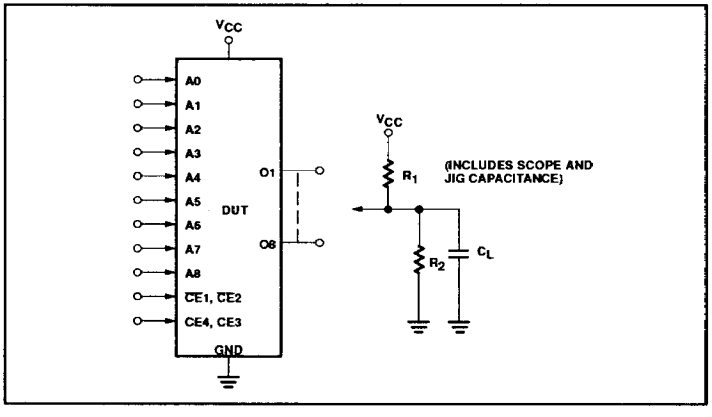

VOLTAGE WAVEFORM

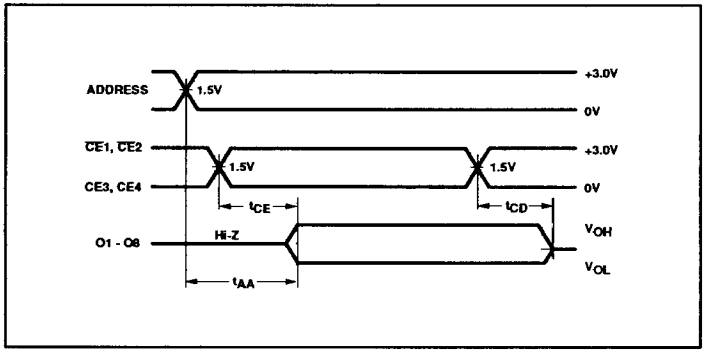

Powered by ICminer.com Electronic-Library Service CopyRight 2003