APEX 150
Coupling connectors

10 way sealed coupling housings

Dimensional characteristics

Notes :

Female connector

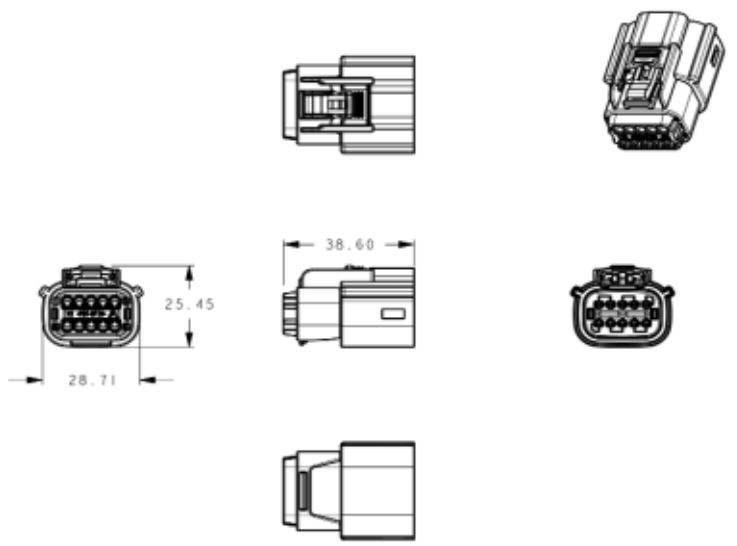

Male connector

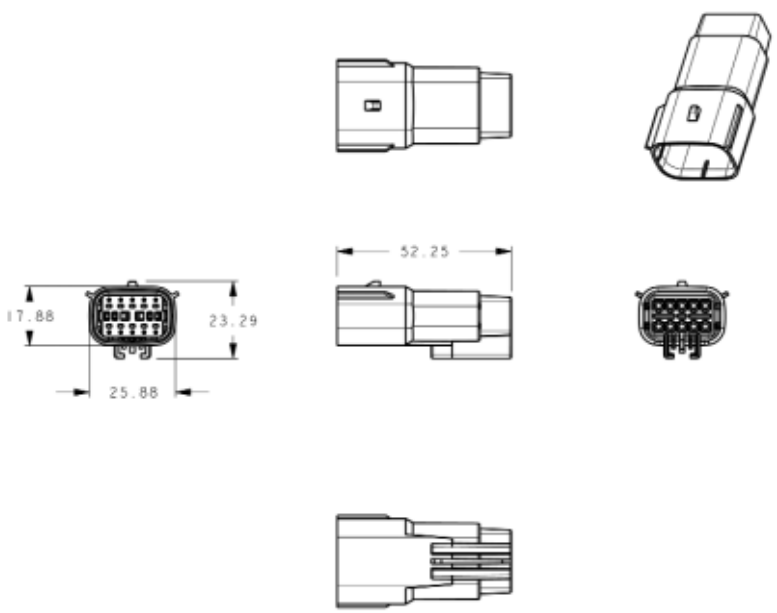

Rev 07/05