SINGLE LEVEL RECTANGULAR LEDs

RP240
LED SIZE 1mm x 5mm

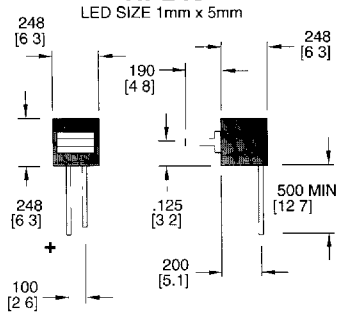

RP280
LED SIZE 2mm x 5mm

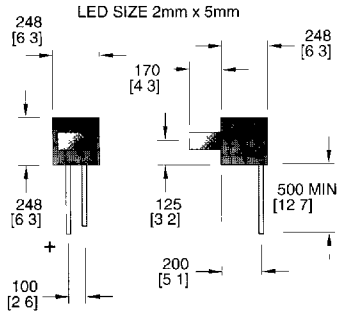

RP210
LED SIZE 2 5mm x 5mm

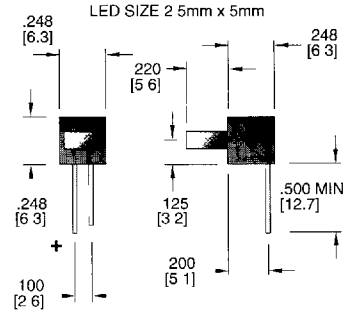

SP200
LED SIZE 5mm x 5mm

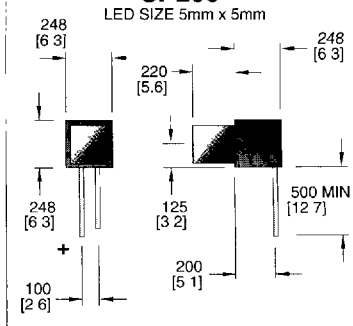

RPT240
LED SIZE 1mm x 5mm

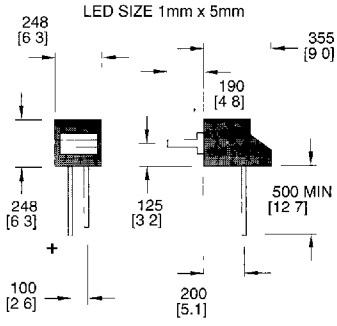

RPT280
LED SIZE 2mm x 5mm

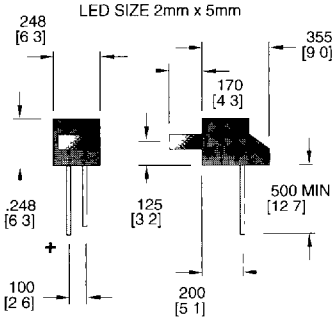

RPT210
LED SIZE 2.5mm x 5mm

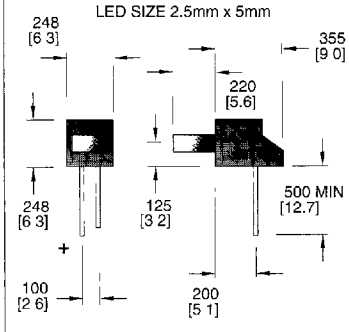

SPT200
LED SIZE 5mm x 5mm

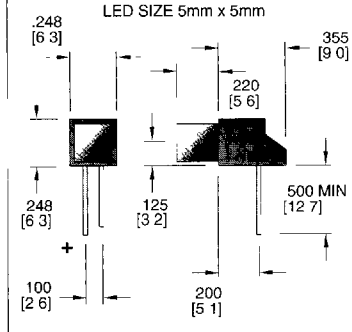

RPV240
LED SIZE 1mm x 5mm

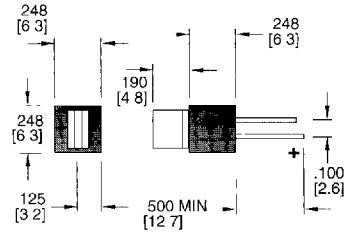

RPV280
LED SIZE 2mm x 5mm

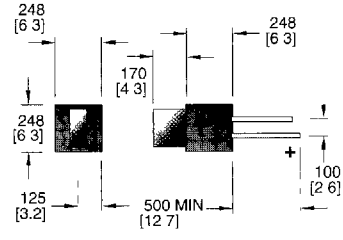

RPV210
LED SIZE 2 5mm x 5mm

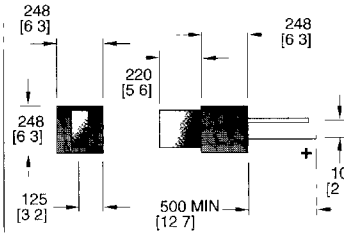

SPV200
LED SIZE 5mm x 5mm

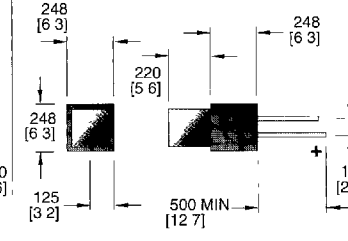

SERIES	CODE	COLOR	mA	Vf	Iv mcd
RP240 RPT240 RPV240	R	RED	10/30	2 0/2 8	2 0/4 0
	Y	YELLOW	10/30	2 1/2 8	1 5/3 0
	G	GREEN	10/30	2 1/2 8	1 5/3 0
	B	BLUE	30/50	3 2/3 7	0 5/0 8
RP280 RPT280 RPV280	R	RED	10/30	2 0/2 8	1 5/3 8
	Y	YELLOW	10/30	2 1/2 8	1 5/3 0
	G	GREEN	10/30	2 1/2.8	1 5/3 0
	B	BLUE	30/50	3 2/3 7	0 4/0 6

SERIES	CODE	COLOR	mA	Vf	Iv mcd
RP210 RPT210 RPV210	R	RED	10/30	2.0/2.8	1 0/2.0
	Y	YELLOW	10/30	2 1/2 8	1 0/2 0
	G	GREEN	10/30	2 1/2 8	2 5/4 5
SP200 SPT200 SPV200	R	RED	10/30	2 0/2 8	0 3/1 0
	Y	YELLOW	10/30	2 1/2 8	0 4/1 5
	G	GREEN	10/30	2 1/2 8	0 4/1 3

- ALL "Vf" READINGS ARE TYP/MAX
- ALL "mcd" READINGS ARE MIN/TYP

SAMPLE PART NUMBER

RP280X3

LED COLOR

BILEVEL RECTANGULAR LEDs

21RP070

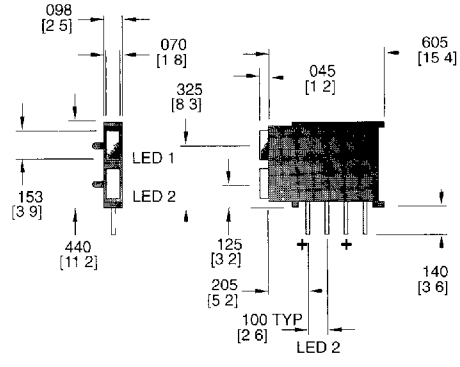

21RPV070

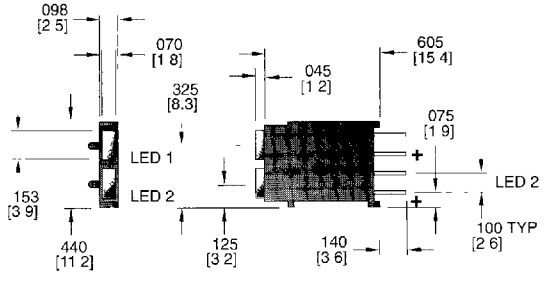

SAMPLE PART NUMBER.

21RPV070T3-X/X

LED 2 COLOR

LED 1 COLOR

CODE	COLOR	mA	Vf	Iv mcd
R	RED	10/30	2 0/2 8	1 2/3 0
Y	YELLOW	10/30	2 1/2 8	1 0/2 3
G	GREEN	10/30	2 1/2 8	1 2/3 0
B	BLUE	30/35	3 2/3 7	0 6/1 1

SPECIALS

- ALL "Vf" READINGS ARE TYP/MAX
- ALL "mcd" READINGS ARE MIN/TYP
- LC = LOW CURRENT 2mA LEDs
- X = DENOTES BLANK LED SPACE
- CONSULT FACTORY ON PART NUMBERS FOR ARRAYS WITH NONCONSECUTIVE COLORS

Arrays

24RP070

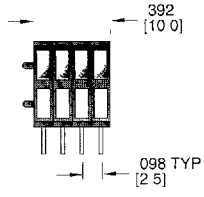

23RP070

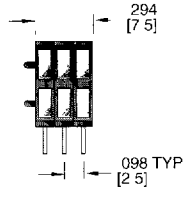
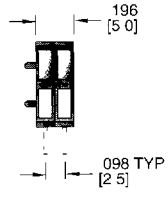
22RP070