Crystal Units
Surface Mount Leaded Type CX49LFWA (CX-49L)

KYOCERA

for Automotive

Pb Free

RoHS Compliant

Features

- Crystal unit for automotive electronics
- Metal package, leaded type
- A resistance weld hermetic sealed type
- Suitable for high density assembly and mass production
- AEC-Q200 certified

Applications

- ECU

How to Order

CX49LFWA 03200 □□ □ □ □ □□

① ② ③ ④ ⑤ ⑥ ⑦

① Series

② Frequency

③ Load Capacitance

H0	12 pF	Std.

④ Frequency Stability

P	±50×10⁻⁶	—
Q	±100×10⁻⁶	Std.

⑤Operating Temp. Range ⑥Frequency Temp. Stability

SW	–40 to +125°C	±200×10⁻⁶	Std.

⑦ Individual Specification... Std.Spec. as "ZZ"

Specifications

Item	Symbol	Specification	Units	Remarks
Frequency Range	f_{nom}	3200 to 20000	kHz	
Overtone Order	OT	Fundamental	—	
Load Capacitance	CL	12	pF	
Frequency Stability	f_{tol}	±100	$\times 10^{-6}$	@ 25°C
Motional Series Resistance	R1	Table 1	ohm	
Drive Level	DL	Table 2	μW	
Operating Temp. Range	T_{use}	–40 to +125	°C	
Storage Temp. Range	T_{stg}	–40 to +150	°C	
Frequency Temp. Characteristics	f_{tem}	±200	$\times 10^{-6}$	ref.@ 25°C over operating temperature range

∗ Please contact us for other specifications.

Typical Frequencies and Part Numbers

Frequency (kHz)	Standard Part Number
4000.000	CX49LFWA04000H0QSWZZ
5000.000	CX49LFWA05000H0QSWZZ
6000.000	CX49LFWA06000H0QSWZZ
8000.000	CX49LFWA08000H0QSWZZ
10000.000	CX49LFWA10000H0QSWZZ
12000.000	CX49LFWA12000H0QSWZZ
16000.000	CX49LFWA16000H0QSWZZ
18000.000	CX49LFWA18000H0QSWZZ
20000.000	CX49LFWA20000H0QSWZZ

Table1 Motional Series Resistance

Frequency Range	Motional Series Resistance	Units
3200 to 3499kHz	300 max.	ohm
3500 to 4099kHz	150 max.	
4100 to 4799kHz	120 max.	
4800 to 5999kHz	100 max.	
6000 to 11999kHz	90 max.	
12000 to 13499kHz	70 max.	
13500 to 20000kHz	50 max.	

Table2 Level of Drive

Frequency Range	Drive Level	Units
3200 to 15999kHz	10 (500 max.)	μW
16000 to 20000kHz	10 (300 max.)	

Dimensions

(Unit: mm)

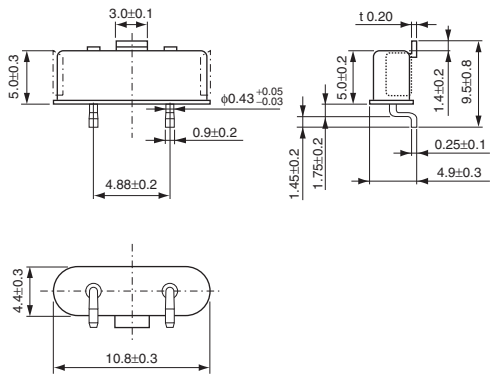

Recommended Land Pattern
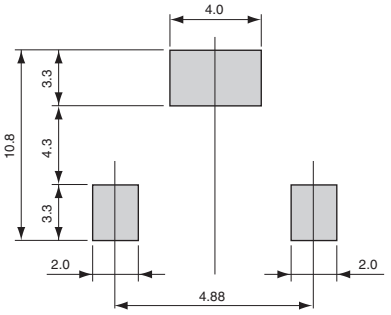
(Unit: mm)