FINAL

# Am27X400

## 4 Megabit (524,288 x 8-Bit/262,144 x 16-Bit) CMOS ExpressROM Device

Advanced Micro Devices

- **As an OTP EPROM alternative:**
  - Factory optimized programming
  - Fully tested and guaranteed
- **As a Mask ROM alternative:**
  - Shorter leadtime
  - Lower volume per code
- **Fast access time**
  - 120 ns
- **Single +5 V power supply**
- **Compatible with JEDEC-approved EPROM pinout**
- **±10% power supply tolerance**
- **High noise immunity**
- **Low power dissipation**
  - 100 µA maximum CMOS standby current
- **Available in Plastic Dual In-Line Package (PDIP) and Plastic Leaded Chip Carrier (PLCC)**
- **Latch-up protected to 100 mA from −1 V to $V_{CC}$ +1 V**
- **Versatile features for simple interfacing**
  - Both CMOS and TTL input/output compatibility
  - Two line control functions

## GENERAL DESCRIPTION

The Am27X400 is a factory programmed and tested OTP EPROM. It is programmed after packaging prior to final test. Every device is rigorously tested under AC and DC operating conditions to your stable code. It is organized as 524,288 by 8 bits/262,144 by 16 bits and is available in plastic dual in-line (PDIP) as well as plastic leaded chip carrier (PLCC) packages. ExpressROM devices provide a board-ready memory solution for medium to high volume codes with short leadtimes. This offers manufacturers a cost-effective and flexible alternative to OTP EPROMs and mask programmed ROMs.

Access times as fast as 120 ns allow operation with high-performance microprocessors with reduced WAIT states. The Am27X400 offers separate Output Enable ($\overline{OE}$) and Chip Enable ($\overline{CE}$) controls, thus eliminating bus contention in a multiple bus microprocessor system.

AMD's CMOS process technology provides high speed, low power, and high noise immunity. Typical power consumption is only 150 mW in active mode, and 100 µW in standby mode.

## BLOCK DIAGRAM

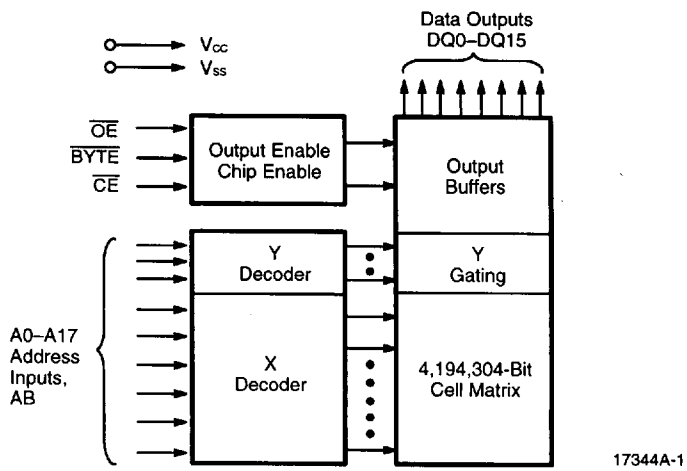

## PRODUCT SELECTOR GUIDE

| Family Part No | Am27X400 | | | |
|---|---|---|---|---|
| Ordering Part No: | | | | |
| $V_{CC}$ ±5% | -125 | | | -255 |
| $V_{CC}$ ±10% | -120 | -150 | -200 | |
| Max Access Time (ns) | 120 | 150 | 200 | 250 |
| $\overline{CE}$ ($\overline{E}$) Access (ns) | 120 | 150 | 200 | 250 |
| $\overline{OE}$ ($\overline{G}$) Access (ns) | 50 | 65 | 75 | 100 |

## CONNECTION DIAGRAMS

### Top View

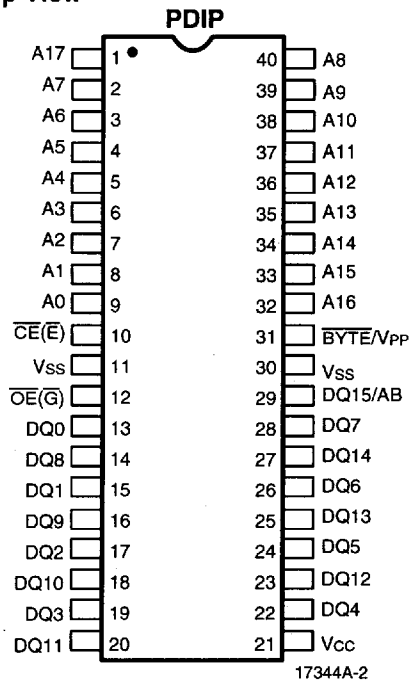


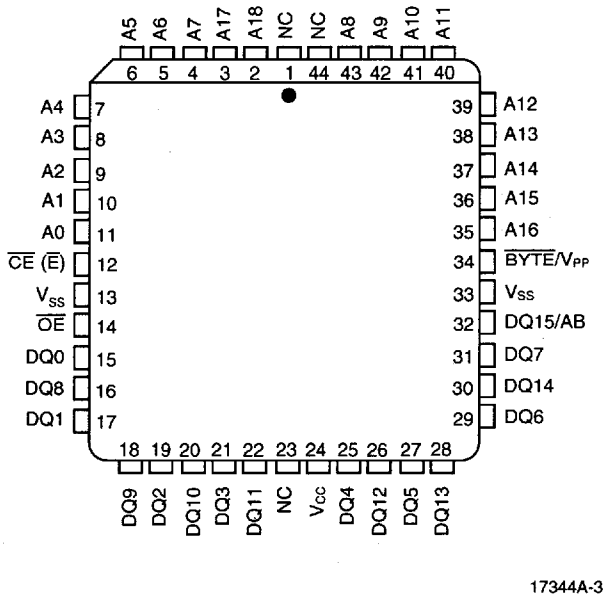


***Note:***

*1. JEDEC nomenclature is in parentheses.*

## PIN DESIGNATIONS

| | | |
|---|---|---|
| AB | = | Address Input ($\overline{BYTE}$ Mode) |
| A0–A17 | = | Address Inputs |
| $\overline{BYTE}$ | = | Byte/Word Switch |
| $\overline{CE}$ ($\overline{E}$) | = | Chip Enable Input |
| DQ0–DQ15 | = | Data Inputs/Outputs |
| DU | = | No External Connection (Do Not Use) |
| NC | = | No Internal Connection |
| $\overline{OE}$ ($\overline{G}$) | = | Output Enable Input |
| $V_{CC}$ | = | $V_{CC}$ Supply Voltage |
| $V_{PP}$ | = | Program Supply Voltage |
| $V_{SS}$ | = | Ground |

## LOGIC SYMBOL

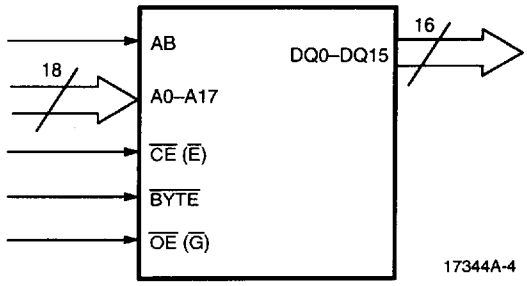

# ORDERING INFORMATION
## Standard Products

AMD standard products are available in several packages and operating ranges. The ordering number (Valid Combination) is formed by a combination of:

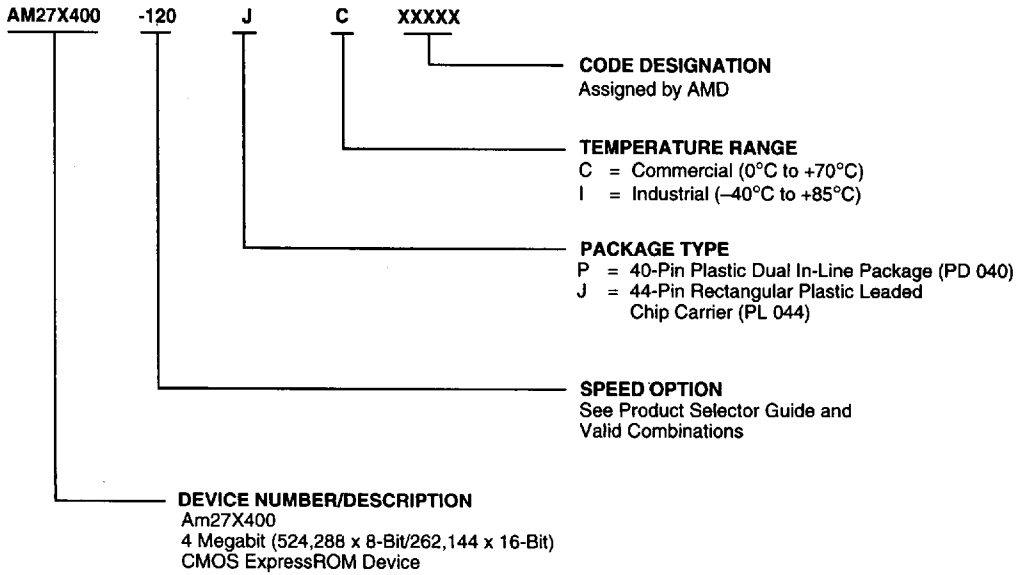


| Valid Combinations | |
|---|---|
| AM27X400-120 | PC, JC, PI, JI |
| AM27X400-125 | |
| AM27X400-150 | |
| AM27X400-200 | |
| AM27X400-255 | |

**Valid Combinations**

Valid Combinations list configurations planned to be supported in volume for this device. Consult the local AMD sales office to confirm availability of specific valid combinations and to check on newly released combinations.

# FUNCTIONAL DESCRIPTION

## Read Mode

The Am27X400 has two control functions, both of which must be logically satisfied in order to obtain data at the outputs. Chip Enable ($\overline{CE}$) is the power control and should be used for device selection. Output Enable ($\overline{OE}$) is the output control and should be used to gate data to the output pins, independent of device selection. Assuming that addresses are stable, address access time ($t_{ACC}$) is equal to the delay from $\overline{CE}$ to output ($t_{CE}$). Data is available at the outputs $t_{OE}$ after the falling edge of $\overline{OE}$, assuming that $\overline{CE}$ has been LOW and addresses have been stable for at least $t_{ACC}$–$t_{OE}$.

## Byte Mode

The user has the option of reading data in either 16-bit words or 8-bit bytes under control of the $\overline{BYTE}$ input. With the $\overline{BYTE}$ input HIGH, inputs A0–A17 will address 256K words of 16-bit data. When the $\overline{BYTE}$ input is LOW, AB functions as the least significant address input and 512K bytes of data can be accessed. The 8 bits of data will appear on DQ0–DQ7.

## Standby Mode

The Am27X400 has a CMOS standby mode which reduces the maximum $V_{CC}$ current to 100 µA. It is placed in CMOS-standby when $\overline{CE}$ is at $V_{CC}$ ± 0.3 V. The Am27X400 also has a TTL-standby mode which reduces the maximum $V_{CC}$ current to 1.0 mA. It is placed in TTL-standby when $\overline{CE}$ is at $V_{IH}$. When in standby mode, the outputs are in a high-impedance state, independent of the $\overline{OE}$ input.

## Output OR-Tieing

To accommodate multiple memory connections, a two-line control function is provided to allow for:

- Low memory power dissipation
- Assurance that output bus contention will not occur

It is recommended that $\overline{CE}$ be decoded and used as the primary device-selecting function, while $\overline{OE}$ be made a common connection to all devices in the array and connected to the READ line from the system control bus. This assures that all deselected memory devices are in their low-power standby mode and that the output pins are only active when data is desired from a particular memory device.

## System Applications

During the switch between active and standby conditions, transient current peaks are produced on the rising and falling edges of Chip Enable. The magnitude of these transient current peaks is dependent on the output capacitance loading of the device. At a minimum, a 0.1 µF ceramic capacitor (high frequency, low inherent inductance) should be used on each device between $V_{CC}$ and $V_{SS}$ to minimize transient effects. In addition, to overcome the voltage drop caused by the inductive effects of the printed circuit board traces on ExpressROM device arrays, a 4.7 µF bulk electrolytic capacitor should be used between $V_{CC}$ and $V_{SS}$ for each eight devices. The location of the capacitor should be close to where the power supply is connected to the array.

## MODE SELECT TABLE

| Mode \ Pins | $\overline{CE}$ | $\overline{OE}$ | $V_{PP}$ | Outputs |
|---|---|---|---|---|
| Read | $V_{IL}$ | $V_{IL}$ | X | DOUT |
| Output Disable | $V_{IL}$ | $V_{IH}$ | X | Hi-Z |
| Standby (TTL) | $V_{IH}$ | X | X | Hi-Z |
| Standby (CMOS) | $V_{CC}$ ± 0.3 V | X | X | Hi-Z |

***Note:***

*1. X = Either $V_{IH}$ or $V_{IL}$*

## ABSOLUTE MAXIMUM RATINGS

Storage Temperature
- OTP Products ..... –65°C to +125°C
- All Other Products ..... –65°C to +150°C

Ambient Temperature
with Power Applied ..... –55°C to +125°C

Voltage with Respect to $V_{SS}$
- All pins except $V_{CC}$ ..... –0.6 V to $V_{CC}$ + 0.6 V
- $V_{CC}$ ..... –0.6 V to +7.0 V

***Note:***

1. *Minimum DC voltage on input or I/O pins is –0.5 V. During transitions, the inputs may overshoot $V_{SS}$ to –2.0 V for periods of up to 20 ns. Maximum DC voltage on input and I/O pins is $V_{CC}$ + 0.5 V which may overshoot to $V_{CC}$ + 2.0 V for periods up to 20 ns.*

*Stresses above those listed under "Absolute Maximum Ratings" may cause permanent damage to the device. This is a stress rating only; functional operation of the device at these or any other conditions above those indicated in the operational sections of this specification is not implied. Exposure of the device to absolute maximum rating conditions for extended periods may affect device reliability.*

## OPERATING RANGES

**Commercial (C) Devices**
- Ambient Temperature ($T_A$) ..... 0°C to +70°C

**Industrial (I) Devices**
- Ambient Temperature ($T_A$) ..... –40°C to +85°C

**Supply Read Voltages**
- $V_{CC}$ for Am27X400-XX5 ..... +4.75 V to +5.25 V
- $V_{CC}$ for Am27X400-XX0 ..... +4.50 V to +5.50 V

*Operating ranges define those limits between which the functionality of the device is guaranteed.*

## DC CHARACTERISTICS over operating range unless otherwise specified (Notes 1, 2 and 4)

| Parameter Symbol | Parameter Description | Test Conditions | Min | Max | Unit |
|---|---|---|---|---|---|
| $V_{OH}$ | Output HIGH Voltage | $I_{OH}$ = –400 µA | 2.4 | | V |
| $V_{OL}$ | Output LOW Voltage | $I_{OL}$ = 2.1 mA | | 0.45 | V |
| $V_{IH}$ | Input HIGH Voltage | | 2.0 | $V_{CC}$ + 0.5 | V |
| $V_{IL}$ | Input LOW Voltage | | –0.5 | +0.8 | V |
| $I_{LI}$ | Input Load Current | $V_{IN}$ = 0 V to +$V_{CC}$ | | 1.0 | µA |
| $I_{LO}$ | Output Leakage Current | $V_{OUT}$ = 0 V to +$V_{CC}$ | | 5.0 | µA |
| $I_{CC1}$ | $V_{CC}$ Active Current (Note 3) | $\overline{CE}$ = $V_{IL}$, f = 5 MHz, $I_{OUT}$ = 0 mA | | 50 | mA |
| $I_{CC2}$ | $V_{CC}$ TTL Standby Current | $\overline{CE}$ = $V_{IH}$ | | 1.0 | mA |
| $I_{CC3}$ | $V_{CC}$ CMOS Standby Current | $\overline{CE}$ = $V_{CC}$ ± 0.3 V | | 100 | µA |

***Notes:***

1. *$V_{CC}$ must be applied simultaneously or before $V_{PP}$, and removed simultaneously or after $V_{PP}$.*
2. ***Caution:** The Am27X400 must not be removed from (or inserted into) a socket when $V_{CC}$ or $V_{PP}$ is applied.*
3. *$I_{CC1}$ is tested with $\overline{OE}$ = $V_{IH}$ to simulate open outputs.*
4. *Minimum DC Input Voltage is –0.5 V during transactions, the inputs may overshoot to –2.0 V for periods less than 20 ns. Maximum DC Voltage on output pins is $V_{CC}$ +0.5 V, which may overshoot to $V_{CC}$ +2.0 V for periods less than 20 ns.*

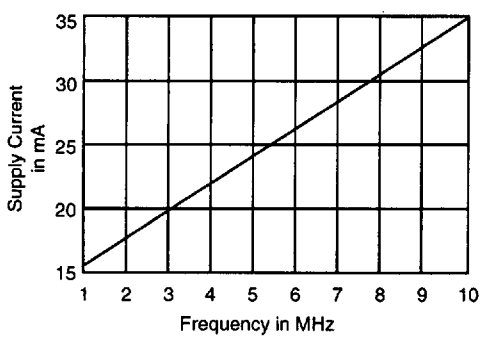


**Figure 1. Typical Supply Current vs. Frequency**
**$V_{CC}$ = 5.5 V, T = 25°C**

17344A-5

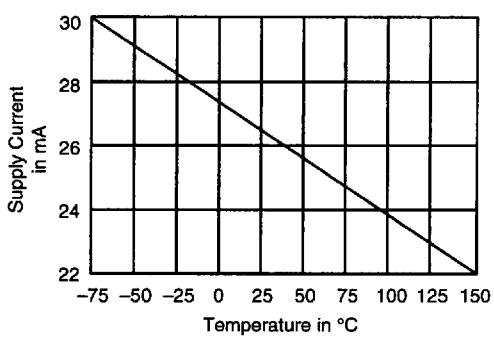


**Figure 2. Typical Supply Current vs. Temperature**
**$V_{CC}$ = 5.5 V, f = 5 MHz**

17344A-6

## CAPACITANCE

| Parameter Symbol | Parameter Description | Test Conditions | PD 040 | | PL 044 | | Unit |
|---|---|---|---|---|---|---|---|
| | | | Typ | Max | Typ | Max | |
| $C_{IN}$ | Input Capacitance | $V_{IN} = 0$ V | 6 | 8 | 9 | 11 | pF |
| $C_{OUT}$ | Output Capacitance | $V_{OUT} = 0$ V | 9 | 11 | 13 | 15 | pF |

***Notes:***

1. *This parameter is only sampled and not 100% tested.*
2. *$T_A = +25°C$, f = 1 MHz.*

## SWITCHING CHARACTERISTICS over operating range unless otherwise specified (Notes 1, 3 and 4)

| Parameter Symbols | | Parameter Description | Test Conditions | | Am27X400 | | | | Unit |
|---|---|---|---|---|---|---|---|---|---|
| JEDEC | Standard | | | | -125 -120 | -150 | -200 | -255 | |
| $t_{AVQV}$ | $t_{RCC}$ | Address to Output Delay | $\overline{CE} = \overline{OE} = V_{IL}$ | Min | – | – | – | – | ns |
| | | | | Max | 120 | 150 | 200 | 250 | |
| $t_{ELQV}$ | $t_{CE}$ | Chip Enable to Output Delay | $\overline{OE} = V_{IL}$ | Min | – | – | – | – | ns |
| | | | | Max | 120 | 150 | 200 | 250 | |
| $t_{GLQV}$ | $t_{OE}$ | Output Enable to Output Delay | $\overline{CE} = V_{IL}$ | Min | – | – | – | – | ns |
| | | | | Max | 50 | 55 | 60 | 75 | |
| $t_{EHQZ}$ $t_{GHQZ}$ | $t_{DF}$ (Note 2) | Chip Enable HIGH or Output Enable HIGH, whichever comes first, to Output Float | | Min | 0 | 0 | 0 | 0 | ns |
| | | | | Max | 30 | 30 | 40 | 60 | |
| $t_{AXQX}$ | $t_{OH}$ | Output Hold from Addresses, $\overline{CE}$, or $\overline{OE}$, whichever occurred first | | Min | 0 | 0 | 0 | 0 | ns |
| | | | | Max | – | – | – | – | |

***Notes:***

1. *$V_{CC}$ must be applied simultaneously or before $V_{PP}$, and removed simultaneously or after $V_{PP}$.*
2. *This parameter is only sampled and not 100% tested.*
3. ***Caution:** The Am27X400 must not be removed from (or inserted into) a socket or board when $V_{PP}$ or $V_{CC}$ is applied.*
4. *Output Load: 1 TTL gate and $C_L = 100$ pF*
   *Input Rise and Fall Times: 20 ns*
   *Input Pulse Levels: 0.45 V to 2.4 V*
   *Timing Measurement Reference Level: 0.8 V and 2 V for inputs and outputs*

## SWITCHING TEST CIRCUIT

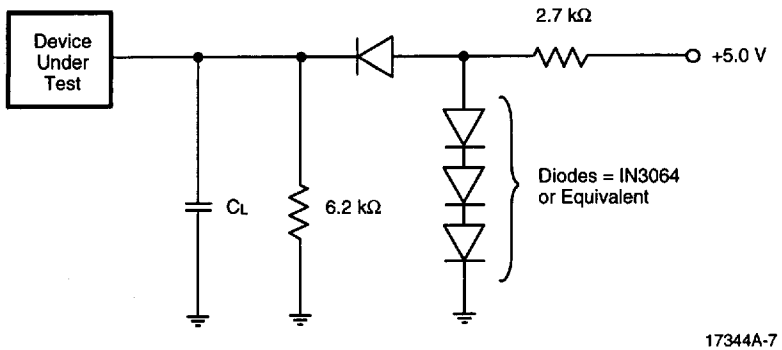


$C_L$ = 100 pF including jig capacitance

## SWITCHING TEST WAVEFORM

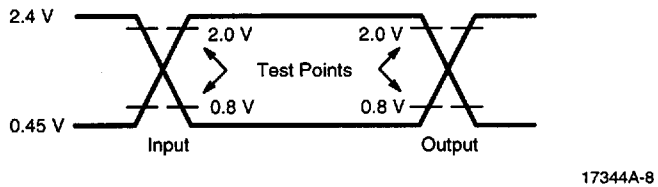


AC Testing: Inputs are driven at 2.4 V for a Logic "1" and 0.45 V for a Logic "0". Input pulse rise and fall times are ≤ 20 ns.

## KEY TO SWITCHING WAVEFORMS

| WAVEFORM | INPUTS | OUTPUTS |
|---|---|---|
| | Must be Steady | Will be Steady |
| | May Change from H to L | Will be Changing from H to L |
| | May Change from L to H | Will be Changing from L to H |
| | Don't Care, Any Change Permitted | Changing, State Unknown |
| | Does Not Apply | Center Line is High-Impedance "Off" State |

KS000010

## SWITCHING WAVEFORMS

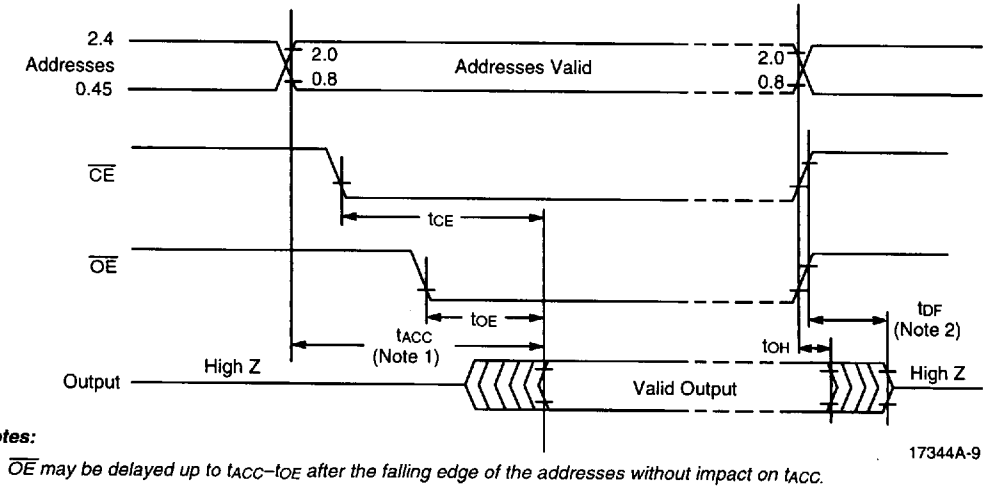


***Notes:***

1. *$\overline{OE}$ may be delayed up to $t_{ACC}-t_{OE}$ after the falling edge of the addresses without impact on $t_{ACC}$.*
2. *$t_{DF}$ is specified from $\overline{OE}$ or $\overline{CE}$, whichever occurs first.*

T-52-33-27

## SELECTING A TARGET (AS AN INITIATOR)

| Symbol | Characteristic | Min | Max | Units |
|---|---|---|---|---|
| $t_{SLOO}$ | $\overline{SEL}$ Out Low to "OR-ED" ID Out | 1.2 | | us |
| $t_{OVAO}$ | "OR-ED" ID Out Valid to $\overline{ACK}$, $\overline{ATN}$ Out | 100 | | ns |
| $t_{AOBH}$ | $\overline{ACK}$, $\overline{ATN}$ Out Valid to $\overline{BSY}$ Out High | 100 | | ns |
| $t_{BHBV}$ | $\overline{BSY}$ Out High to $\overline{BSY}$ In Low Valid | 400 | | ns |
| $t_{BLSH}$ | $\overline{BSY}$ In Low to $\overline{SEL}$ Out High | 100 | | ns |



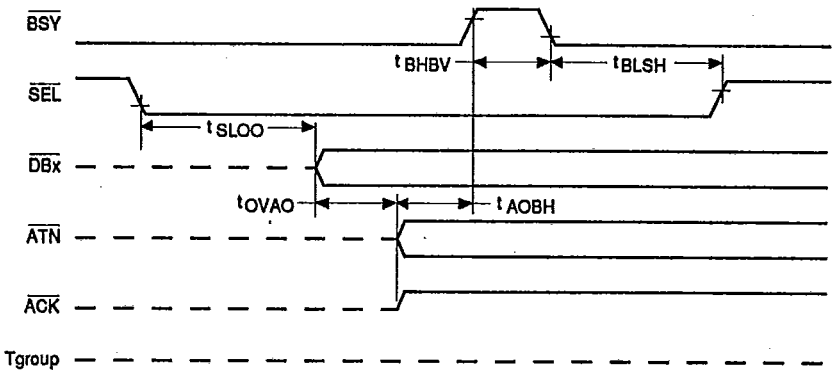


NOTE: Tgroup = signals driven by a Target = $\overline{I/O}$, $\overline{C/D}$, $\overline{MSG}$, $\overline{REQ}$

11653-027A

## RESPONSE TO SELECTION (AS A TARGET)

| Symbol | Characteristic | Min | Max | Units |
|---|---|---|---|---|
| $t_{SLBH}$ | $\overline{SEL}$ In Low to $\overline{BSY}$ In High | 0 | | ns |
| $t_{IVBH}$ | "OR-ED" ID Valid In to $\overline{BSY}$ In High | 0 | | ns |
| $t_{BHBL}$ | $\overline{SEL}$ Low , ID Valid , $\overline{BSY}$ High to $\overline{BSY}$ Low | 0.4 | 200 | us |
| $t_{BLOI}$ | $\overline{BSY}$ Out Low to "OR-ED" ID Invalid In | 0 | | ns |
| $t_{BLSH}$ | $\overline{BSY}$ Out Low to $\overline{SEL}$ In High | 0 | | ns |
| $t_{AVSH}$ | $\overline{ATN}$ Valid In to $\overline{SEL}$ In High | 0 | | ns |
| $t_{SHIO}$ | $\overline{SEL}$ In High to Tgroup Out | 100 | | ns |



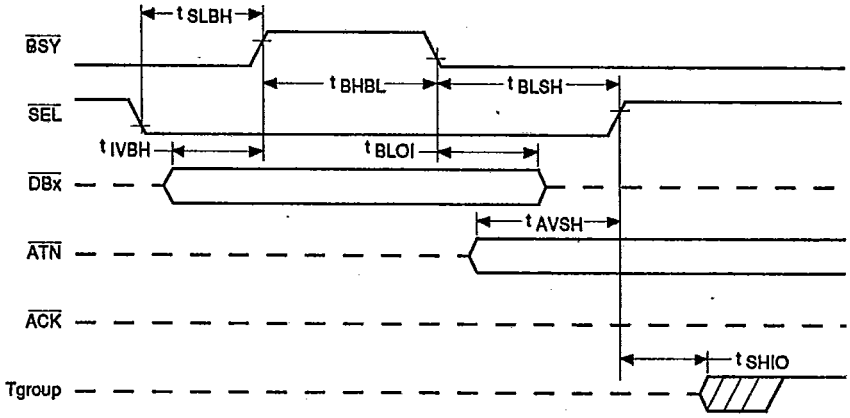


NOTE: Tgroup = signals driven by a Target = $\overline{I/O}$, $\overline{C/D}$, $\overline{MSG}$, $\overline{REQ}$

11653-028A

T-52-33-27

## RESELECTING AN INITIATOR (AS A TARGET)

| Symbol | Characteristic | Min | Max | Units |
|---|---|---|---|---|
| $t_{SLOO}$ | $\overline{SEL}$ Out Low to "OR-ED" ID Out | 2 | | µs |
| $t_{OVIO}$ | "OR-ED" ID Out Valid to I/O & Tgroup Out Valid | 100 | | ns |
| $t_{IOBH}$ | I/O & Tgroup Out Valid to $\overline{BSY}$ Out High | 100 | | ns |
| $t_{BHBV}$ | $\overline{BSY}$ Out High to $\overline{BSY}$ In Low Valid | 400 | | ns |
| $t_{BLSH}$ | $\overline{BSY}$ In Low to $\overline{SEL}$ Out High | 100 | | ns |



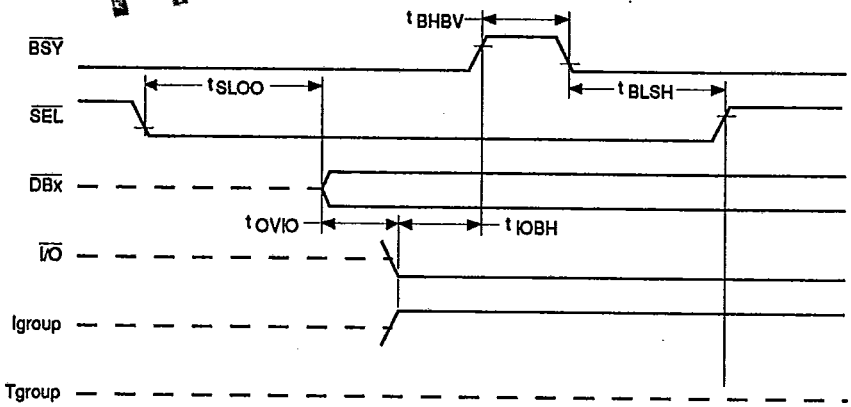


NOTE: Tgroup = signals driven by a Target = $\overline{C/D}$, $\overline{MSG}$, $\overline{REQ}$
Igroup = signals driven by an Initiator = $\overline{ATN}$, $\overline{ACK}$

11853-029A

## RESPONSE TO RESELECTION (AS AN INITIATOR)

| Symbol | Characteristic | Min | Max | Units |
|---|---|---|---|---|
| $t_{SLBH}$ | $\overline{SEL}$ In Low to $\overline{BSY}$ In High | 0 | | ns |
| $t_{IVBH}$ | "OR-ED" ID Valid In to $\overline{BSY}$ In High | 0 | | ns |
| $t_{ILBH}$ | $\overline{I/O}$ In Low to $\overline{BSY}$ In High | 0 | | ns |
| $t_{BHAO}$ | $\overline{SEL}$ Low , ID Valid , $\overline{BSY}$ High to Igroup Out | 100 | | ns |
| $t_{AVBL}$ | Igroup Valid Out to $\overline{BSY}$ Out Low | 100 | | ns |
| $t_{BHBL}$ | $\overline{BSY}$ In High to $\overline{BSY}$ Out Low | 0.4 | 200 | µs |
| $t_{BLOI}$ | $\overline{BSY}$ Out Low to "OR-ED" ID Invalid In | 0 | | ns |
| $t_{BLSH}$ | $\overline{BSY}$ Out Low to $\overline{SEL}$ In High | 0 | | ns |
| $t_{SHBH}$ | $\overline{SEL}$ In High to $\overline{BSY}$ Out High | 0 | | ns |



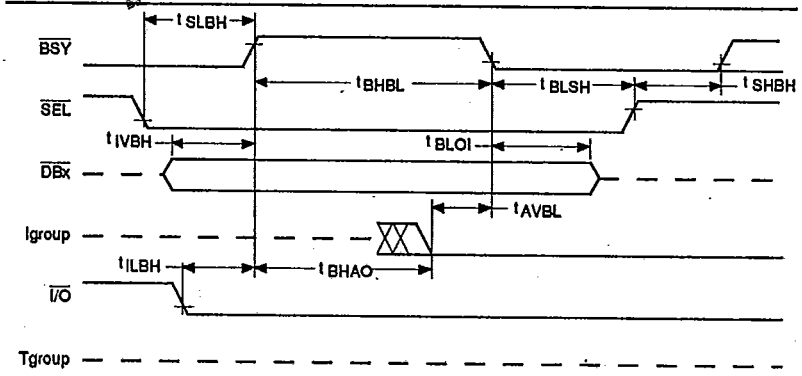


Tgroup = signals driven by a Target = $\overline{C/D}$, $\overline{MSG}$, $\overline{REQ}$
Igroup = signals driven by an Initiator = $\overline{ATN}$, $\overline{ACK}$
*** $\overline{BSY}$ will still be driven by the reselecting target.

11853-030A

T-52-33-27

## RECEIVE ASYNCHRONOUS INFORMATION TRANSFER IN (ACTING AS AN INITIATOR)

| Symbol | Characteristic | Min | Max | Units |
|---|---|---|---|---|
| $t_{SHPC}$ | $\overline{SEL}$ In High to Phase Change In | 0 | | ns |
| $t_{ILDT}$ | $\overline{I/O}$ In Low to Data Bus TRISTATE | 0 | 125 | ns |
| $t_{PCRL}$ | Phase Change In to $\overline{REQ}$ In Low | 400 | | ns |
| $t_{DVRL}$ | Data Valid In to $\overline{REQ}$ In Low | 0 | | ns |
| $t_{RLAL}$ | $\overline{REQ}$ In Low to $\overline{ACK}$ Out Low | 0 | 175 | ns |
| $t_{ALDI}$ | $\overline{ACK}$ Out Low to Data Invalid In | 0 | | ns |
| $t_{ALRH}$ | $\overline{ACK}$ Out Low to $\overline{REQ}$ In High | 0 | | ns |
| $t_{RHAH}$ | $\overline{REQ}$ In High to $\overline{ACK}$ Out High | 0 | 175 | ns |
| $t_{AHPC}$ | $\overline{ACK}$ Out High to Phase Change In | 0 | | ns |



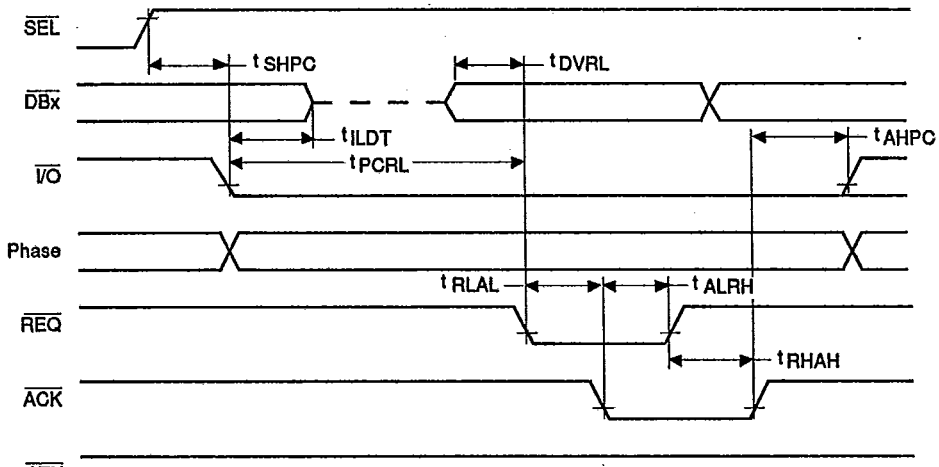


NOTE: Phase = signals that define the bus phase $\overline{C/D}$, $\overline{MSG}$

11853-031A

## SEND ASYNCHRONOUS INFORMATION TRANSFER IN (ACTING AS A TARGET)

| Symbol | Characteristic | Min | Max | Units |
|---|---|---|---|---|
| $t_{SHPC}$ | $\overline{SEL}$ In High to Phase Change Out | 100 | | ns |
| $t_{ILDO}$ | $\overline{I/O}$ Out Low to Data Out | 800 | | ns |
| $t_{DVRL}$ | Data Out Valid to $\overline{REQ}$ Out Low | 55 | | ns |
| $t_{PCRL}$ | Phase Change Out to $\overline{REQ}$ Out Low | 500 | | ns |
| $t_{RLAL}$ | $\overline{REQ}$ Out Low to $\overline{ACK}$ In Low | 0 | | ns |
| $t_{ALRH}$ | $\overline{ACK}$ In Low to $\overline{REQ}$ Out High | 0 | 175 | ns |
| $t_{ALDI}$ | $\overline{ACK}$ In Low to Data Out Invalid | 0 | | ns |
| $t_{RHAH}$ | $\overline{REQ}$ Out High to $\overline{ACK}$ In High | 0 | | ns |
| $t_{AHPC}$ | $\overline{ACK}$ In High to Phase Change Out | 100 | | ns |
| $t_{AHRL}$ | $\overline{ACK}$ In High to $\overline{REQ}$ Out Low | 0 | 175 | ns |

T-52-33-27

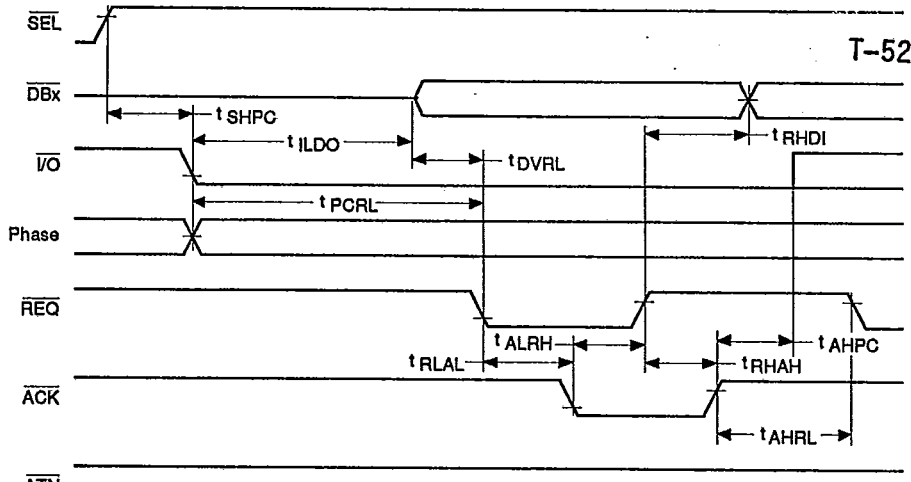


NOTE: Phase = signals that define the bus phase $\overline{C/D}$, $\overline{MSG}$

11853-032A

**SEND ASYNCHRONOUS INFORMATION TRANSFER OUT (ACTING AS AN INITIATOR)**

| Symbol | Characteristic | Min | Max | Units |
|---|---|---|---|---|
| $t_{SHPC}$ | $\overline{SEL}$ In High to Phase Change In | 0 | | ns |
| $t_{IHDO}$ | $\overline{I/O}$ In High to Data Out | 0 | | ns |
| $t_{PCRL}$ | Phase Change In to $\overline{REQ}$ In Low | 400 | | ns |
| $t_{RLAL}$ | $\overline{REQ}$ In Low to $\overline{ACK}$ Out Low | 0 | 175 | ns |
| $t_{DVAL}$ | Data Out Valid to $\overline{ACK}$ Out Low | 55 | | ns |
| $t_{ALRH}$ | $\overline{ACK}$ Out Low to $\overline{REQ}$ In High | 0 | | ns |
| $t_{RHAH}$ | $\overline{REQ}$ In High to $\overline{ACK}$ Out High | 0 | 175 | ns |
| $t_{RHDI}$ | $\overline{REQ}$ In High to Data Out Invalid | 0 | | ns |
| $t_{AHPC}$ | $\overline{ACK}$ Out High to Phase Change In | 0 | | ns |



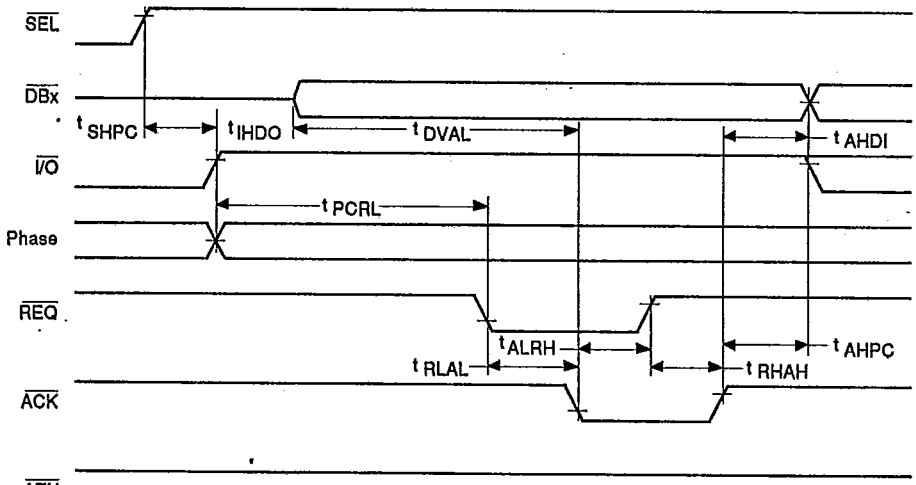


NOTE: Phase = signals that define the bus phase $\overline{C/D}$, $\overline{MSG}$

11853-033A

T-52-33-27

**RECEIVE ASYNCHRONOUS INFORMATION TRANSFER OUT (ACTING AS A TARGET)**

| Symbol | Characteristic | Min | Max | Units |
|---|---|---|---|---|
| $t_{SHPC}$ | $\overline{SEL}$ In High to Phase Change Out | 100 | | ns |
| $t_{IHDT}$ | $\overline{I/O}$ Out High to Data Bus TRISTATE | 0 | | ns |
| $t_{PCRL}$ | Phase Change to $\overline{REQ}$ Out Low | 500 | | ns |
| $t_{RLAL}$ | $\overline{REQ}$ Out Low to $\overline{ACK}$ In Low | 0 | | ns |
| $t_{DVAL}$ | Data In Valid to $\overline{ACK}$ In Low | 0 | | ns |
| $t_{ALRH}$ | $\overline{ACK}$ In Low to $\overline{REQ}$ Out High | 0 | 175 | ns |
| $t_{RHDI}$ | $\overline{REQ}$ Out High to Data In Invalid | 0 | | ns |
| $t_{RHAH}$ | $\overline{REQ}$ Out High to $\overline{ACK}$ In High | 0 | | ns |
| $t_{AHPC}$ | $\overline{ACK}$ In High to Phase Change Out | 0 | | ns |
| $t_{AHRL}$ | $\overline{ACK}$ In High to $\overline{REQ}$ Out Low | 0 | 175 | ns |



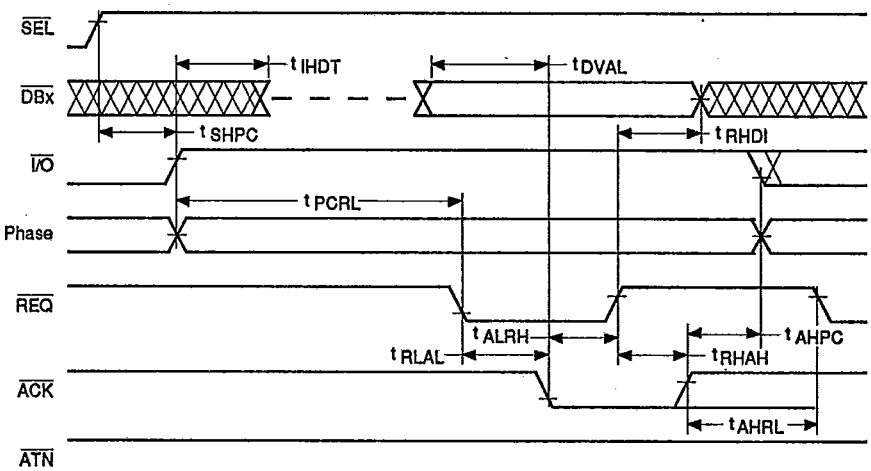


NOTE: Phase = signals that define the bus phase $\overline{C/D}$, $\overline{MSG}$

11853-034A

**RECEIVE SYNCHRONOUS INFORMATION TRANSFER IN (ACTING AS AN INITIATOR)**

| Symbol | Characteristic | Min | Max | Units |
|---|---|---|---|---|
| $t_{DVRL}$ | Data Valid In to $\overline{REQ}$ In Low | 0 | | ns |
| $t_{RLDI}$ | $\overline{REQ}$ In Low to DATA Invalid | 45 | | ns |
| $t_{RLRH}$ | $\overline{REQ}$ In Low to $\overline{REQ}$ In High | 50 | | ns |
| $t_{RHRL}$ | $\overline{REQ}$ In High to $\overline{REQ}$ In Low | 50 | | ns |
| $t_{ALAH}$ | $\overline{ACK}$ Out Low to $\overline{ACK}$ Out High | Tcyc-10 | | ns |
| $t_{AHAL}$ | $\overline{ACK}$ Out High to $\overline{ACK}$ Out Low | Tcyc-25 | | ns |
| $t_{AHPC}$ | $\overline{ACK}$ Out High to Phase Change | 0 | | ns |



*Parameters $t_{SHPC}$, $t_{ILDT}$, and $t_{PCRL}$ are also applicable and are identical to those in Receive Asynchronous Information Transfer In (Acting as an Initiator), top of page 37.*

4