140 MHz Bandpass SAW Filter

28 MHz Bandwidth

BP62100

Complies with Directive 2002/95/EC (RoHS Compliant)

Specifications					
Parameter	Sym	Minimum	Typical	Maximum	Unit
Center Frequency at 25°C	fc	139.75	140	140.25	MHz
Insertion Loss at fc	IL	-	24.8	26.5	dB
1 dB Bandwidth	BW_1	26.4	26.75	-	MHz
3 dB Bandwidth	BW_3	28.0	28.35	-	MHz
40dB Bandwidth	BW_{40}	-	34.82	36.0	MHz
50dB Bandwidth	BW_{50}	-	35.50	36.4	MHz
Passband Variation	-	-	0.5	0.7	dB
Phase Linearity	-	-	3	6	Deg
Group Delay Variation	-	-	10	50	nsec
Absolute Delay	-	-	1.042	-	µsec
Ultimate Rejection	-	50	60	-	dB
Substrate Material	-	-	128-$LiNbO_3$	-	-
Ambient Temperature	Ta	-	25	-	°C
Operatable Temperature Range	To	-45	-	85	°C

Typical Performance

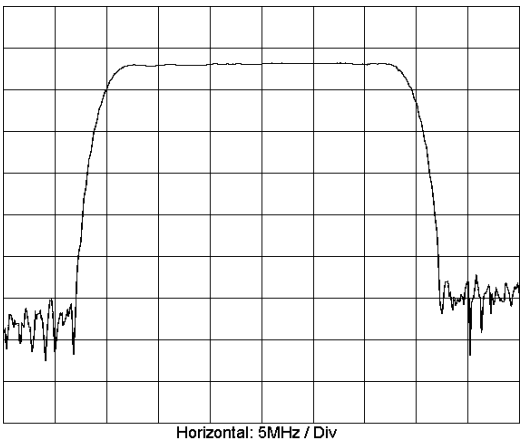

Horizontal: 5MHz / Div
Vertical: 10dB / Div

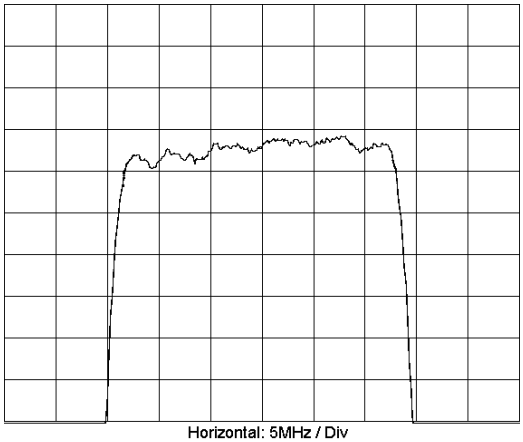

Horizontal: 5MHz / Div
Vertical: 1dB / Div

Package Outline

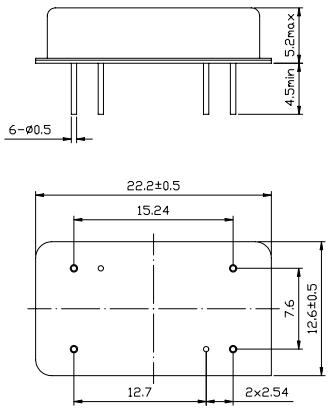

Matching Configuration

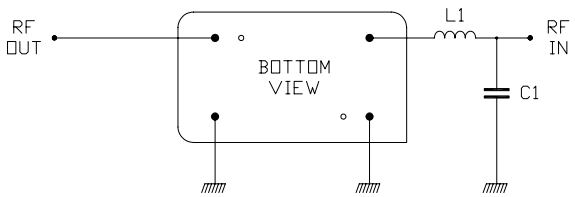

L1 = 47nH C1 = 18pF

Nominal Source/Load Impedance : 50 Ω

Note: Component values may change depending on

©2006 by Vanlong Technology Co., Ltd.