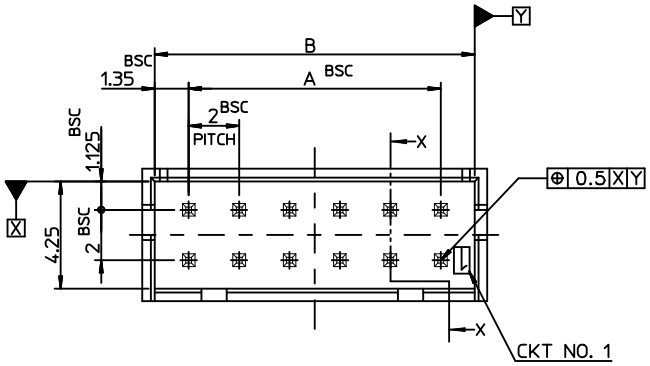

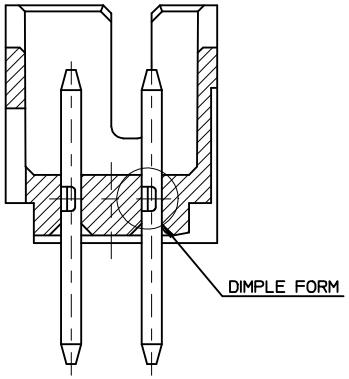

SECTION X–X
SCALE 4:1

D	C	B	A	MAT'L NO.	ENG. NO.	CKT
26.0	31.7	30.7	28.0	68146301*	68146-301*	30
24.0	29.7	28.7	26.0	68146281*	68146-281*	28
22.0	27.7	26.7	24.0	68146261*	68146-261*	26
20.0	25.7	24.7	22.0	68146241*	68146-241*	24
18.0	23.7	22.7	20.0	68146221*	68146-221*	22
16.0	21.7	20.7	18.0	68146201*	68146-201*	20
14.0	19.7	18.7	16.0	68146181*	68146-181*	18
12.0	17.7	16.7	14.0	68146161*	68146-161*	16
10.0	15.7	14.7	12.0	68146141*	68146-141*	14
8.0	13.7	12.7	10.0	68146121*	68146-121*	12
6.0	11.7	10.7	8.0	68146101*	68146-101*	10

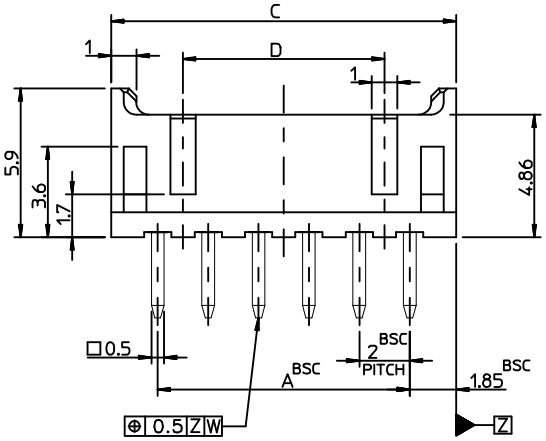

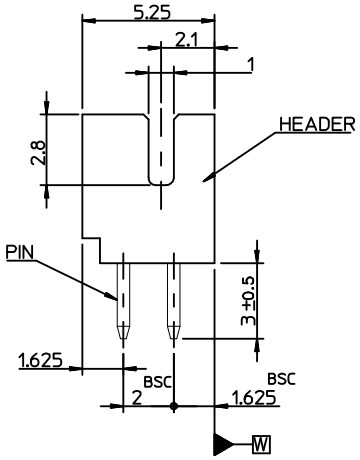

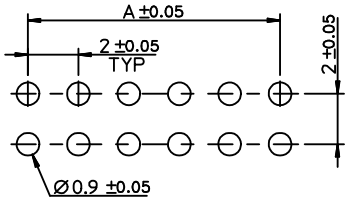

P.C.BOARD LAYOUT
(THICKNESS:1.6t)

NOTE

1. MATED HOUSING : 35560-**0*
   MATED TERMINAL : 35476-8002
2. CAMBER/BOW : 0.1 MAX.
3. PRODUCT SPECIFICATION : PS-35560-001

LEGEND

68146 - ** 1*
- COLOR : 0 --- NATURAL
  1 --- BLACK
- CKT (10,12,14,..30)

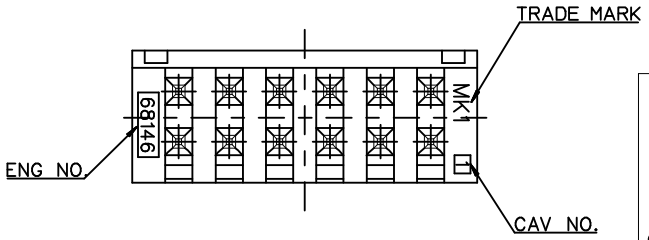

REVISED
EC NO: KOR2009-0057 2009/03/24
DRWN:HJEONG 2009/03/24
CHKD:YSOOKIM 2009/03/24
APPR:YUNSIKKIM 2009/03/24
DESCRIPTION
B3
REV

QUALITY SYMBOLS
▼=0
Ⓒ=0

GENERAL TOLERANCES (UNLESS SPECIFIED)	mm	INCH
4 PLACES	± ---	± ---
3 PLACES	± ---	± ---
2 PLACES	± 0.2	± ---
1 PLACE	± 0.2	± ---
ANGULAR ± 1 °		

DRAFT WHERE APPLICABLE MUST REMAIN WITHIN DIMENSIONS

DIMENSION STYLE: MM ONLY
SCALE: 5:1
DESIGN UNITS: METRIC
THIRD ANGLE PROJECTION

DRAWN BY	KSKIM	DATE 2000/11/02
CHECKED BY	JKOH	DATE 2000/11/02
APPROVED BY	CWLEE	DATE 2000/11/02

TITLE: NEW 2.0MM DUAL W/B HEADER ASS'Y(ST)

molex MOLEX INCORPORATED

MATERIAL NO.: SEE TABLE
DOCUMENT NO.: SD-68146-001
SHEET NO.: 1 OF 1
SIZE: A3

THIS DRAWING CONTAINS INFORMATION THAT IS PROPRIETARY TO MOLEX INCORPORATED AND SHOULD NOT BE USED WITHOUT WRITTEN PERMISSION