DATE	SYM	REVISION RECORD	AUTH.	DR.	CK.
2/4/00	–	ISSUED		NT	DG

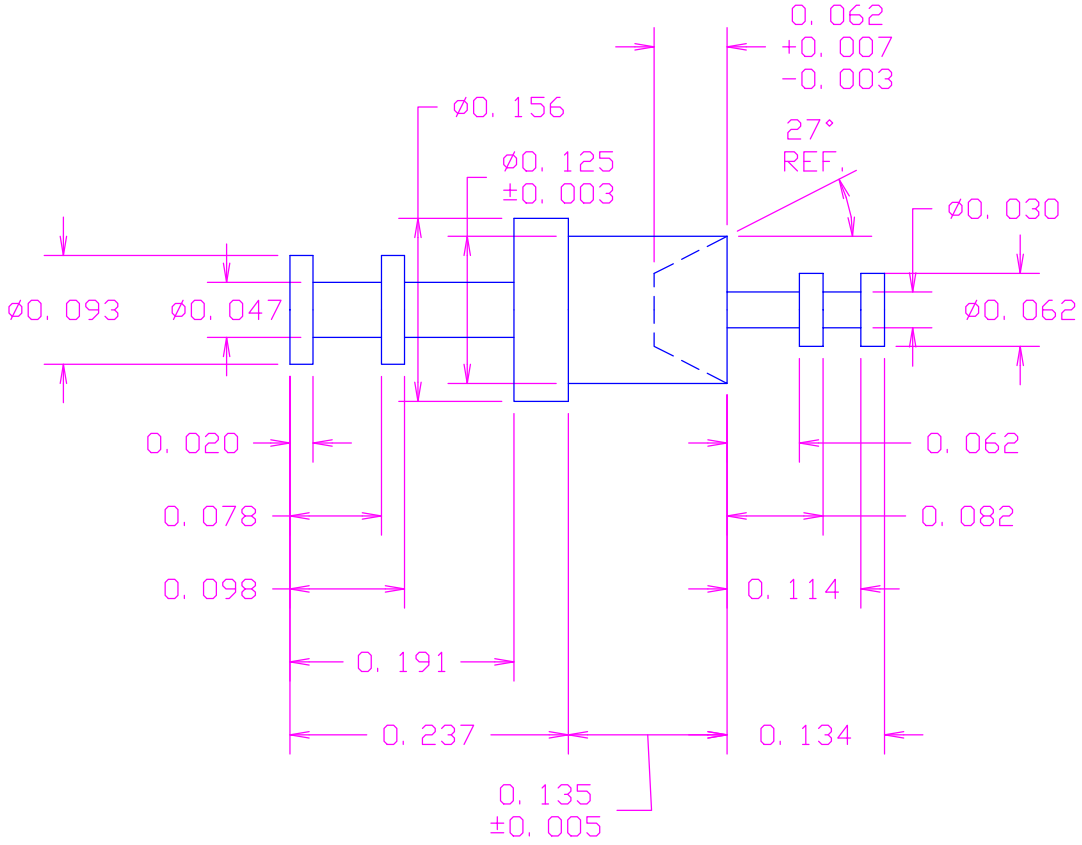

MATERIAL: BRASS PER ASTM B16,
ALLOY C 36000, 1/2 HARD

FINISH: TIN–LEAD ELECTRODEPOSITED IN ACCORDANCE WITH MIL–P–81728, .0003"MIN. THICKNESS. THE MIN. LEAD CONTENT SHALL BE 3%

ACTUAL SIZE

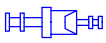

TOLERANCES (EXCEPT AS NOTED)	CONCORD ELECTRONICS CORPORATION		
DECIMAL ± .005	P/N	SCALE	30 GREAT JONES ST. NEW YORK N. Y. 10012
FRACTIONAL ±	TITLE TERMINAL		
ANGULAR ± 3°	DATE 3–18–97	DRAWING NUMBER 15–512–3–08	