THIS DRAWING IS UNPUBLISHED. RELEASED FOR PUBLICATION -.- .
© COPYRIGHT - BY TYCO ELECTRONICS CORPORATION. ALL RIGHTS RESERVED.

LOC	DIST
AD	00

REVISIONS

P	LTR	DESCRIPTION	DATE	DWN	APVD
	H	EC 0G3C 0828 04	19FEB05	BSV	JLG

1. TRUE POSITION TOLERANCE OF THE POST TIPS APPLIES WHEN THE HEADERS ARE HELD FLAT AGAINST THE PRINTED CIRCUIT BOARD.

2. THE NOTED DIMENSIONS APPLY AT THE INTERSECTION OF THE POST AND THE HOUSING.

3. RETENTION FEATURES ON SOLDER TAILS, LOCATED AT MANUFACTURERS OPTION.

4. ⌖ .020Ⓜ FOR KINKED TAILS

5. 0.000762 [.000030] GOLD IN CONTACT AREA, 0.00254–0.00504 [.000100–.000200] MATTE TIN–LEAD ON SOLDER TAIL, ALL OVER 0.00127 [.000050] NICKEL.

6. HOUSING: LCP, COLOR–BLACK.
POSTS: PHOSPHOR BRONZE

7. 0.000762 [.000030] GOLD IN CONTACT AREA, 0.00254–0.00504 [.000100–.000200] MATTE TIN ON SOLDER TAIL, ALL OVER 0.00127 [.000050] NICKEL.

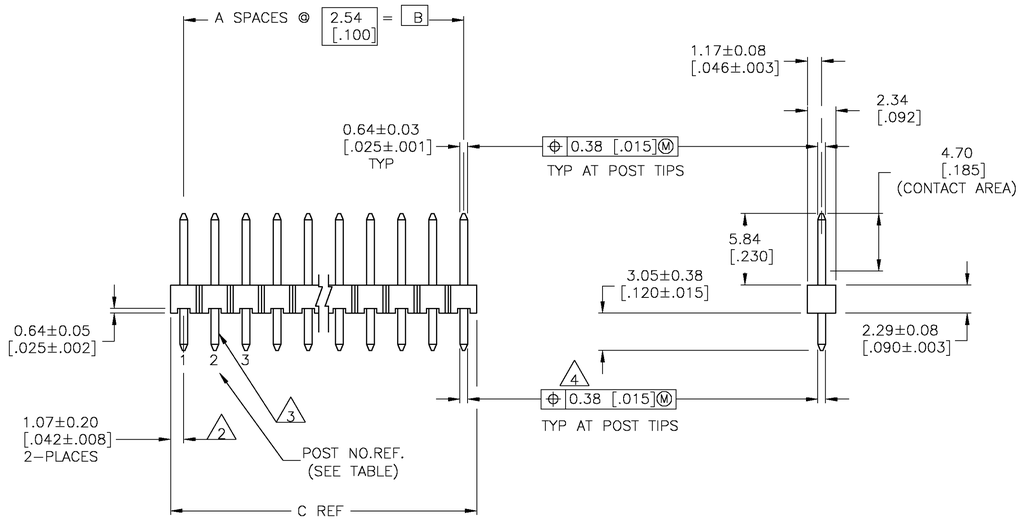

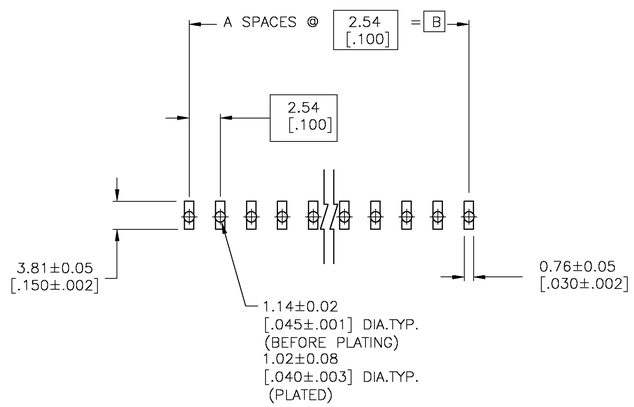

RECOMMENDED PC BOARD MOUNTING DIMENSIONS FOR .063 [1.60] THICK PC BOARD AND .012 [.305] STENCIL THICK.

7	101.19 [3.984]	99.06 [3.900]	39	40	9–146293–0
7	98.65 [3.884]	96.52 [3.800]	38	39	8–146293–9
7	96.11 [3.784]	93.98 [3.700]	37	38	8–146293–8
7	93.57 [3.684]	91.44 [3.600]	36	37	8–146293–7
7	91.03 [3.584]	88.90 [3.500]	35	36	8–146293–6
7	88.49 [3.484]	86.36 [3.400]	34	35	8–146293–5
7	85.95 [3.384]	83.82 [3.300]	33	34	8–146293–4
7	83.41 [3.284]	81.28 [3.200]	32	33	8–146293–3
7	80.87 [3.184]	78.74 [3.100]	31	32	8–146293–2
7	78.33 [3.084]	76.20 [3.000]	30	31	8–146293–1
7	75.79 [2.984]	73.66 [2.900]	29	30	8–146293–0
7	73.25 [2.884]	71.12 [2.800]	28	29	7–146293–9
7	70.71 [2.784]	68.58 [2.700]	27	28	7–146293–8
7	68.17 [2.684]	66.04 [2.600]	26	27	7–146293–7
7	65.63 [2.584]	63.5 [2.500]	25	26	7–146293–6
7	63.09 [2.484]	60.96 [2.400]	24	25	7–146293–5
7	60.55 [2.384]	58.42 [2.300]	23	24	7–146293–4
7	58.01 [2.284]	55.88 [2.200]	22	23	7–146293–3
7	55.47 [2.184]	53.34 [2.100]	21	22	7–146293–2
7	52.93 [2.084]	50.80 [2.000]	20	21	7–146293–1
7	50.39 [1.984]	48.26 [1.900]	19	20	7–146293–0
7	47.85 [1.884]	45.72 [1.800]	18	19	6–146293–9
7	45.31 [1.784]	43.18 [1.700]	17	18	6–146293–8
7	42.77 [1.684]	40.64 [1.600]	16	17	6–146293–7
7	40.23 [1.584]	38.10 [1.500]	15	16	6–146293–6
7	37.69 [1.484]	35.56 [1.400]	14	15	6–146293–5
7	35.15 [1.384]	33.02 [1.300]	13	14	6–146293–4
7	32.61 [1.284]	30.48 [1.200]	12	13	6–146293–3
7	30.07 [1.184]	27.94 [1.100]	11	12	6–146293–2
7	27.53 [1.084]	25.40 [1.000]	10	11	6–146293–1
7	24.99 [.984]	22.86 [.900]	9	10	6–146293–0
7	22.45 [.884]	20.32 [.800]	8	9	5–146293–9
7	19.91 [.784]	17.78 [.700]	7	8	5–146293–8
7	17.37 [.684]	15.24 [.600]	6	7	5–146293–7
7	14.83 [.584]	12.70 [.500]	5	6	5–146293–6
7	12.29 [.484]	10.16 [.400]	4	5	5–146293–5
7	9.75 [.384]	7.62 [.300]	3	4	5–146293–4
7	7.21 [.284]	5.08 [.200]	2	3	5–146293–3
PLATING	C	B	A	NO. OF POSITIONS	PART NUMBER

	5	101.19 [3.984]	99.06 [3.900]	39	40	4–146293–0
	5	98.65 [3.884]	96.52 [3.800]	38	39	3–146293–9
	5	96.11 [3.784]	93.98 [3.700]	37	38	3–146293–8
	5	93.57 [3.684]	91.44 [3.600]	36	37	3–146293–7
	5	91.03 [3.584]	88.90 [3.500]	35	36	3–146293–6
	5	88.49 [3.484]	86.36 [3.400]	34	35	3–146293–5
	5	85.95 [3.384]	83.82 [3.300]	33	34	3–146293–4
	5	83.41 [3.284]	81.28 [3.200]	32	33	3–146293–3
	5	80.87 [3.184]	78.74 [3.100]	31	32	3–146293–2
	5	78.33 [3.084]	76.20 [3.000]	30	31	3–146293–1
	5	75.79 [2.984]	73.66 [2.900]	29	30	3–146293–0
	5	73.25 [2.884]	71.12 [2.800]	28	29	2–146293–9
	5	70.71 [2.784]	68.58 [2.700]	27	28	2–146293–8
	5	68.17 [2.684]	66.04 [2.600]	26	27	2–146293–7
	5	65.63 [2.584]	63.5 [2.500]	25	26	2–146293–6
	5	63.09 [2.484]	60.96 [2.400]	24	25	2–146293–5
	5	60.55 [2.384]	58.42 [2.300]	23	24	2–146293–4
	5	58.01 [2.284]	55.88 [2.200]	22	23	2–146293–3
	5	55.47 [2.184]	53.34 [2.100]	21	22	2–146293–2
	5	52.93 [2.084]	50.80 [2.000]	20	21	2–146293–1
	5	50.39 [1.984]	48.26 [1.900]	19	20	2–146293–0
	5	47.85 [1.884]	45.72 [1.800]	18	19	1–146293–9
	5	45.31 [1.784]	43.18 [1.700]	17	18	1–146293–8
	5	42.77 [1.684]	40.64 [1.600]	16	17	1–146293–7
	5	40.23 [1.584]	38.10 [1.500]	15	16	1–146293–6
	5	37.69 [1.484]	35.56 [1.400]	14	15	1–146293–5
	5	35.15 [1.384]	33.02 [1.300]	13	14	1–146293–4
	5	32.61 [1.284]	30.48 [1.200]	12	13	1–146293–3
	5	30.07 [1.184]	27.94 [1.100]	11	12	1–146293–2
	5	27.53 [1.084]	25.40 [1.000]	10	11	1–146293–1
	5	24.99 [.984]	22.86 [.900]	9	10	1–146293–0
	5	22.45 [.884]	20.32 [.800]	8	9	146293–9
	5	19.91 [.784]	17.78 [.700]	7	8	146293–8
	5	17.37 [.684]	15.24 [.600]	6	7	146293–7
	5	14.83 [.584]	12.70 [.500]	5	6	146293–6
	5	12.29 [.484]	10.16 [.400]	4	5	146293–5
	5	9.75 [.384]	7.62 [.300]	3	4	146293–4
	5	7.21 [.284]	5.08 [.200]	2	3	146293–3
SUPERSEDED BY 146269–1		4.67 [.184]	2.54 [.100]	1	2	146293–2
OBSOLETE		2.13 [.084]	– [–]	0	1	146293–1
	PLATING	C	B	A	NO. OF POSITIONS	PART NUMBER

THIS DRAWING IS A CONTROLLED DOCUMENT.

DIMENSIONS: mm [INCHES]

TOLERANCES UNLESS OTHERWISE SPECIFIED:
0 PLC ± –
1 PLC ± –
2 PLC ± –
3 PLC ± –
4 PLC ± –
ANGLES ± –

MATERIAL 6
FINISH SEE TABLE

DWN T. HOFFMAN 6/12/95
CHK G. DUBNICZKI 1/2/96
APVD G. DUBNICZKI 1/2/96
PRODUCT SPEC –
APPLICATION SPEC –
WEIGHT –

Tyco Electronics Corporation
Harrisburg, Pa 17105–3608

NAME HEADER ASSEMBLY, MOD II, BREAKAWAY, SINGLE ROW, HIGH TEMPERATURE, VERTICAL WITH RETENTION FEATURE, W/.025 SQ. POSTS, .100 C/L

SIZE A1 | CAGE CODE 00779 | DRAWING NO C–146293 | RESTRICTED TO –

CUSTOMER DRAWING | SCALE 4:1 | SHEET 1 OF 1 | REV H