THIS DRAWING IS UNPUBLISHED. RELEASED FOR PUBLICATION -,- .
© COPYRIGHT - BY TYCO ELECTRONICS CORPORATION. ALL RIGHTS RESERVED.

LOC	DIST
J	—

REVISIONS 変更

P	LTR	DESCRIPTION	DATE	DWN	APVD
	E	REDRAWN WITH CHANGE	28MAR'08	J.S	S.M

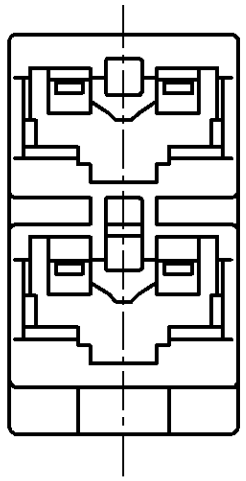

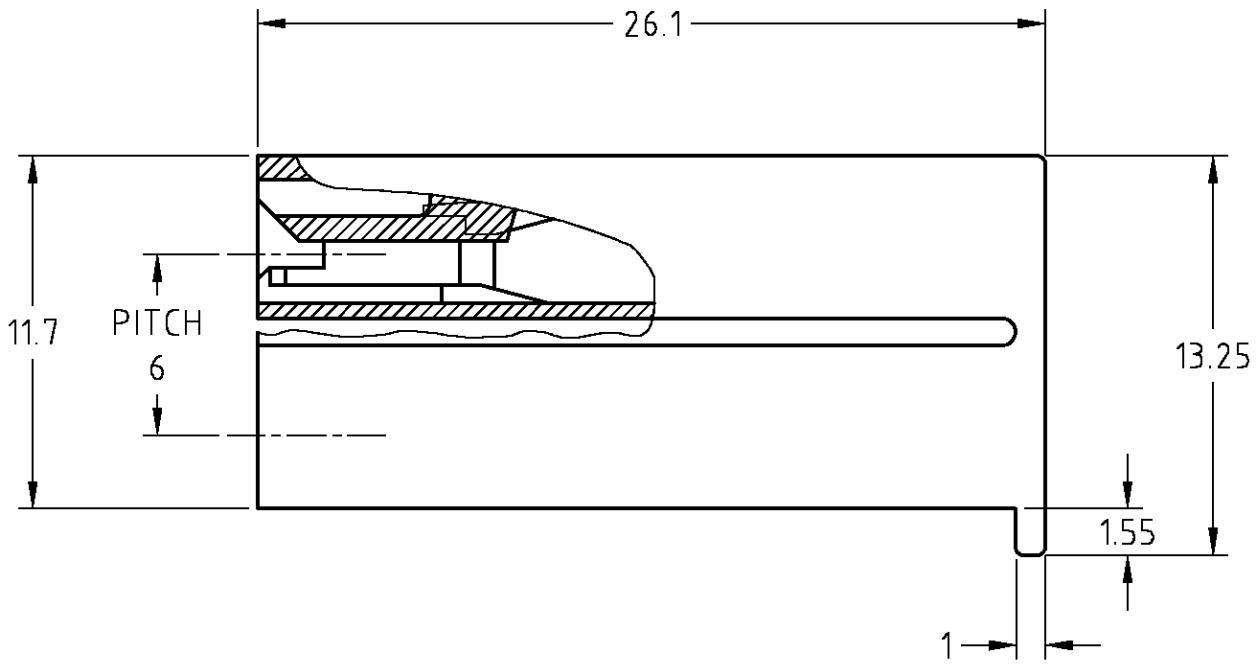

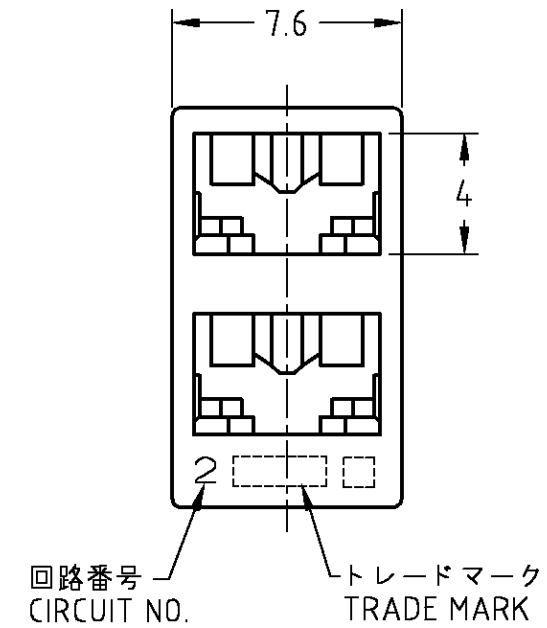

注記
1. 適用コンタクト型番：170324-X,170325-X,170326-X
2. 本コネクタはリードスイッチ（2極）に適合する。
3. 適用タブ寸法についてはCP80-25075を参照のこと。
4 材料：6/6ナイロン（UL94V-2)
5 材料：6/6ナイロン（UL94V-0)
6 材料：ガラス入り6/6ナイロン（UL94V-0)

NOTES
1. APPLICABLE CONTACT P/N : 170324-X,170325-X,170326-X
2. APPLICABLE MATING PART : LEAD SWITCH (2POS)
3. SEE DWG NO. CP80-25075 FOR APPLICABLE TAB DIMENSIONS.
4 MATERIAL : 6/6 NYLON (UL94V-2)
5 MATERIAL : 6/6 NYLON (UL94V-0)
6 MATERIAL : 6/6 NYLON GLASS FILLED (UL94V-0)

	1-172210-7	172210-7	赤色 RED
	1-172210-2	172210-2	黒色 BLACK
2-172210-6	1-172210-6	172210-6	青色 BLUE
	1-172210-5	172210-5	緑色 GREEN
	1-172210-4	172210-4	黄色 YELLOW
2-172210-1	1-172210-1	172210-1	自然色 NATURAL
6	5	4	色調 COLOR
型番 PART NUMBER			

THIS DRAWING IS A CONTROLLED DOCUMENT.

DIMENSIONS: 単位：耗 mm

TOLERANCES UNLESS OTHERWISE SPECIFIED: 一般公差 ± 0.4

MATERIAL 材料: SEE NOTE

FINISH 仕上:

DWN	J.SATO	26MAR2008
CHK	S.MANABE	28MAR2008
APVD	S.MANABE	28MAR2008
PRODUCT SPEC 製品規格	108-5126	
APPLICATION SPEC 取付適用規格		
WEIGHT		

CUSTOMER DRAWING

Tyco Electronics Corporation
Kawasaki, Japan

NAME 名称: 187 SERIES 2POS POSITIVE LOCK(MARK-II) HOUSING

SIZE	CAGE CODE	DRAWING NO 番号	RESTRICTED TO
A3	00779	C-172210	—

SCALE 尺度 4:1 | SHEET 1 OF 1 | REV E

AMP 1470-19 REV 31MAR2000