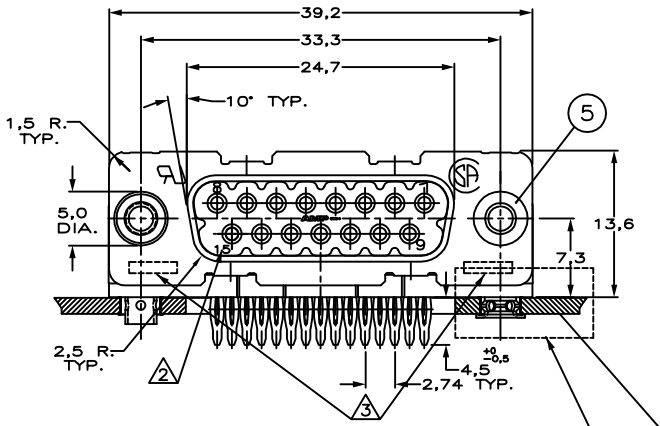

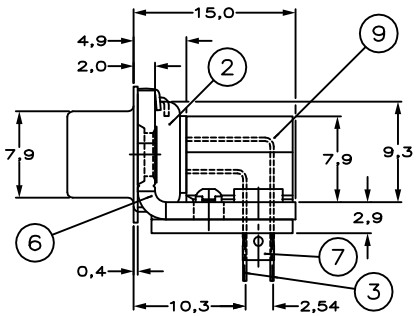

P.C.BOARD SHOWN FOR REF. ONLY.

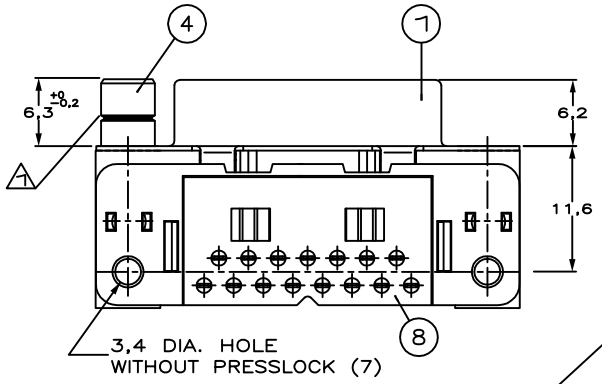

5 OBSOLETE

6 1–188306–2 SUPERSEDED BY 3–1393481–0
2–188306–2 SUPERSEDED BY 2–1393481–2
3–188306–2 SUPERSEDED BY 2–1393497–4
6–188306–2 SUPERSEDED BY 3–1393481–0
7–188306–2 SUPERSEDED BY 2–1393481–2
8–188306–2 SUPERSEDED BY 2–1393497–4

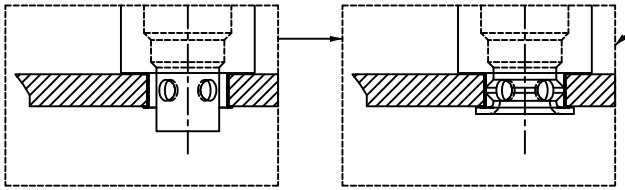

BEFORE CLINCHING

AFTER CLINCHING

P.C.B. HOLE DIM. FOR CONTACTS		
DRILLED HOLE	:1,15 ±0,025	mm
FIN. HOLE	:0,94 to 1,09	mm
AFTER REFLOW	:0,91 to 1,09	mm
Cu–thks	:0,025 to 0,075	mm
SnPb–thks	:0,004 to 0,010	mm

RECOMMENDED P.C. BOARD HOLE–LAYOUT

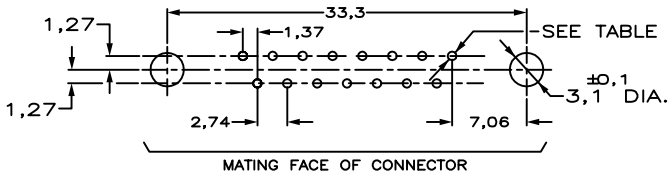

MATING FACE OF CONNECTOR

DO NOT SCALE — DIMENSIONS IN mm — METRIC — THIRD ANGLE PROJECTION

ACCESSORIES PREFIX "Z"

ITEM NR.	DESCRIPTION OF ACCESSORY	1–XXXXX–Y	2–XXXXX–Y	3–XXXXX–Y	4–XXXXX–Y	5–XXXXX–Y	6–XXXXX–Y	7–XXXXX–Y	8–XXXXX–Y	9–XXXXX–Y
5	BUSHING WITH THROUGHHOLE 3,1 DIA.	2					2			
5	BUSHING WITH INNER THREAD 4–40 UNC		2					2		
5	BUSHING WITH INNER THREAD M3			2					2	
4	FEMALE SCREWLOCK WITH 4–40 UNC				2					2
4	FEMALE SCREWLOCK WITH M3					2				2
7	PRESSLOCK	2	2	2	2	2				

HOW TO ORDER

15 POS.-----> Z–188306–Y

PREFIX FOR ACCESSORIES

BASIC PARTNR.

SUFFIX FOR PLATING

PLATING SUFFIX "Y"

GOLD OVER NICKEL AS PER PERFORMANCE LEVEL 2 (DIN 41652) PRESS–FIT PART:2,5µm BRIGHT SnPb. } –Y = –2

– – – } –

NOTES :

1 GROOVE INDICATES VERSION WITH 4–40 UNC INNER THREAD; WITHOUT GROOVE INDICATES VERSION WITH M3 INNER THREAD.

2 CAVITY IDENTIFICATION AT FRONT SIDE ONLY.

3 PARTNUMBER AND DATE CODE.

4 CONN. CAN BE USED FOR P.C.B. THICKNESS OF 1,6 mm MIN. AND THICKER. VERSIONS WITH PRESS–LOCKS ONLY SUITABLE FOR P.C.B. THICKNESS OF 1,6 mm.

ITEM NRS./MATERIAL :

1	SHELL	: BRIGHT TINPLATED STEEL
2	HOUSING	: GLASSFILLED POLYESTER, COLOR : BLACK
3	CONTACTS	: PHOSPHORBRONZE (PLATING : SEE TABLE ABOVE)
4	FEMALE SCREWLOCK	: TINPLATED STEEL (INNER THREAD 4–40 UNC OR M3)
5	BUSHING	: TINPLATED STEEL (INNER THREAD 4–40 UNC OR M3 OR 3,1 DIA THRU–HOLE)
6	BRACKET	: TINPLATED STEEL
7	PRESSLOCK	: TINPLATED BRASS
8	POST ALIGNMENTPLATE	: GLASSFILLED POLYESTER, COLOR : BLACK
9	SUPPORT	: GLASSFILLED POLYESTER, COLOR : BLACK

LTR.	REVISION RECORD	DR.	CHK.	DATE
–	–	–	–	–
–	–	–	–	–
–	–	–	–	–
–	–	–	–	–
G	EH10–0435–04	JvdH	PDJ	14 DEC 04
F	EH–1417–99	T.K.	W.C.	19–02–00
E	EH–0033–99	D.K.	W.S	18 JAN 99

CUSTOMER DRAWING — FOR REFERENCE ONLY WILL NOT BE UPDATED

© COPYRIGHT 19 – BY AMP–HOLLAND B.V. ALL INTERNATIONAL RIGHTS RESERVED.AMP PRODUCTS MAY BE COVERED BY U.S. AND FOREIGN AND/OR PATENTS PENDING. THIS DRAWING IS UNPUBLISHED

~~RELEASED FOR PUBLICATION ,19~~

AMP — AMP–HOLLAND B.V. 's–Hertogenbosch, The Netherlands.

NAME: HD–20 SIZE 2 RIGHT ANGLE RECEPTACLE PRESS–FIT HEADER, MARK–II+

DR.: D.KESSLER DATE: 18..01.99 | CHK.: W.SOOMERS DATE: – | APP.: – DATE: –

DWG.No. C– 188306 | REV.LTR. G | SHEET 1 OF 1 | A2

R6–129 (REV.04–91)

11 10 9 8 7 6 5 4 3 2 1