Honeywell

LIMIT SWITCH

CATALOGUE LISTING
GLS

CHART NO.
MTG-GL-175

MTG-GL-175

REPLACES

DRAWING NUMBER A018-38

ISSUE 9

RELEASE NUMBER

REVISIONS	
5	7/96
A018-262	
6	12/96
A018-293	
7	7/97
CO-000083	
8	8/97
CO-000106	
9	CO/395
1 WEIR 6/98	

FIG. 1

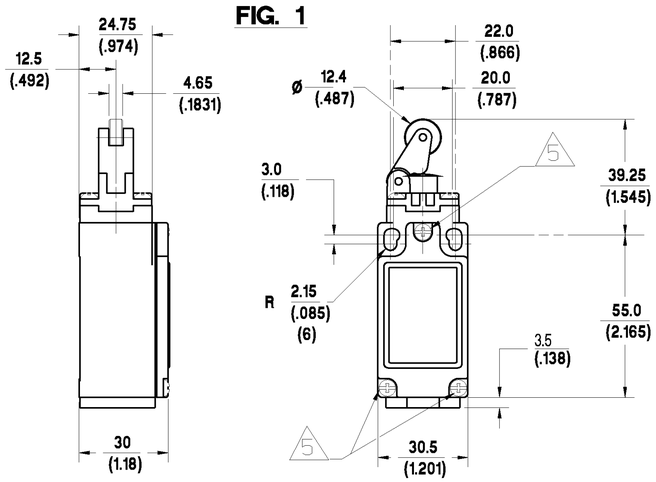

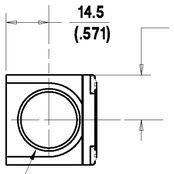

CONDUIT THREAD
PG 13.5

B

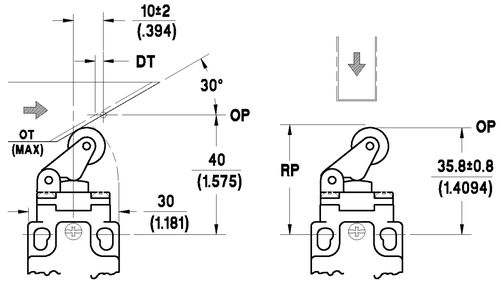

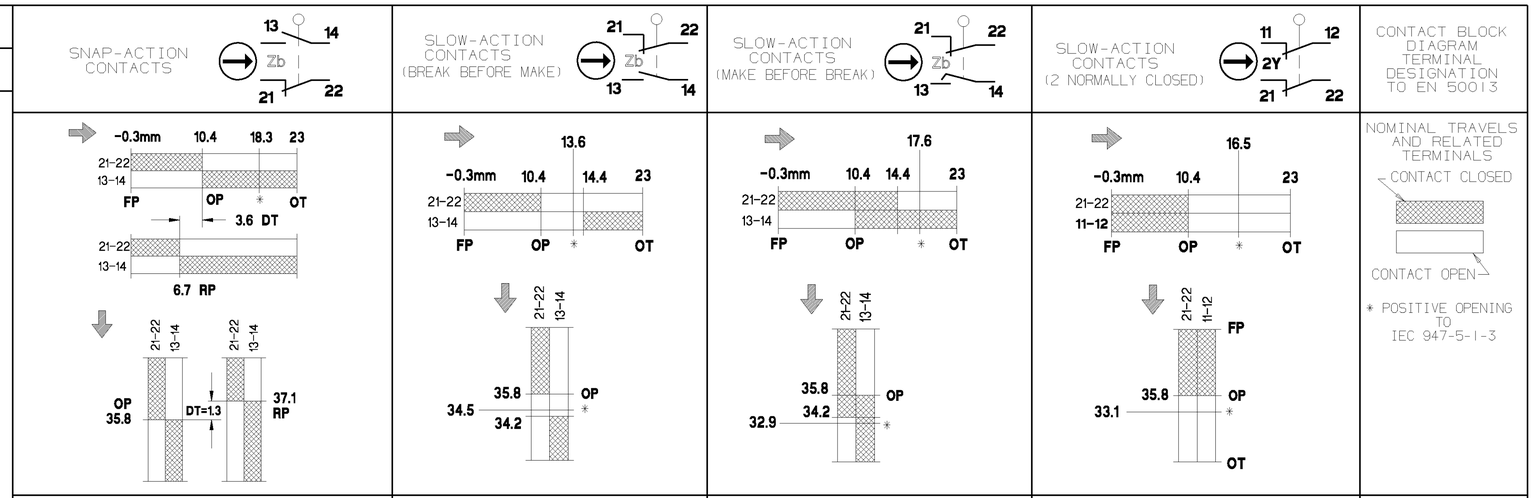

	SNAP-ACTION CONTACTS	SLOW-ACTION CONTACTS (BREAK BEFORE MAKE)	SLOW-ACTION CONTACTS (MAKE BEFORE BREAK)	SLOW-ACTION CONTACTS (2 NORMALLY CLOSED)		
NORMAL OPERATING FORCE MAX	10 (2.2)	9 (2.0)	10 (2.2)	8 (1.8)		N (lbf)
MAXIMUM DISCONNECT FORCE	13 (3.0)	16 (3.6)	17 (3.8)	13 (3.0)		N (lbf)
	01 OR 07	03 OR 33	04 OR 34	06 OR 36		
				06	BASIC SWITCH WITH SILVER CONTACTS	
				36	BASIC SWITCH WITH GOLD PLATED CONTACTS	

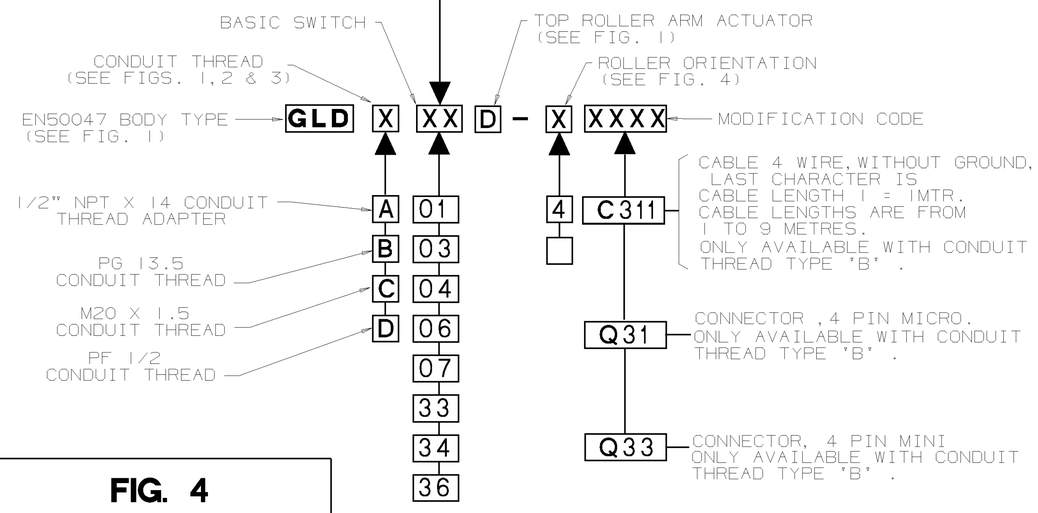

NOTES:-

1. MICRO SWITCH BLUE GLASS FILLED POLYESTER HOUSING & COVER. BLACK GLASS FILLED POLYAMIDE HEAD.
2. ENCLOSURE DOUBLE INSULATED TO IEC 539 CLASS II.
3. MINIMUM OPERATING VELOCITY (Vmin) = 1.0 MM/S
   MAXIMUM OPERATING VELOCITY (Vmax) = 100 MM/S
   MAXIMUM OPERATING FREQUENCY (Fmax) = 250 OPS/MIN
   (THESE LIMITS APPLY TO CAM OPERATION AS SHOWN IN THE ABOVE DIAGRAMS ONLY)
4. FREE POSITION (FP), OPERATING POINT (OP), OVERTRAVEL (OT) AND PRETRAVEL (PT) ALL TO EN50047.

5 MAXIMUM TIGHTENING TORQUE FOR FIXING SCREW = 0.5Nm (4.4in.LB)

NO CHANGES CAN BE MADE TO THIS DRAWING WITHOUT JOINT NEWHOUSE/FREEPORT APPROVAL

FIG. 2

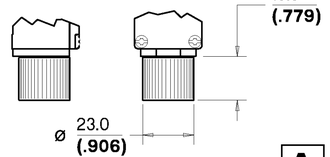

1/2" NPT X 14 CONDUIT THREAD ADAPTER

A

FIG. 3

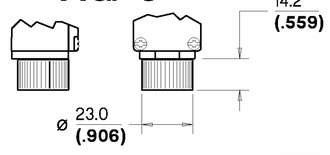

M20 X 1.5 & PF1/2 CONDUIT THREAD ADAPTERS

C D

FIG. 4

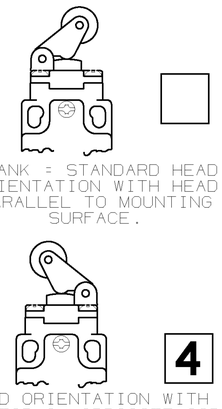

BLANK = STANDARD HEAD ORIENTATION WITH HEAD PARALLEL TO MOUNTING SURFACE.

4

HEAD ORIENTATION WITH ACTUATOR ON OPPOSITE SIDE FROM STANDARD.

NOTE:-
ANY STANDARD LISTING WITH SUFFIX 'RS' OR 'FE' IS PERMITTED.

NOTE:
FOR CONNECTION DIAGRAMS AND ADDITIONAL ELECTRICAL, ENVIRONMENTAL & DIMENSIONAL INFORMATION SEE DRAWING GL-49212.

IEC 947-5-1 ELECTRICAL RATING

SILVER CONTACTS						GOLD PLATED CONTACTS
AC		AC (FOR 2NC)		DC		
A600 AC15 Ue	Ie	A500 AC15 Ue	Ie	Q300 DC13 Ue	Ie	
VOLTS	AMPS	VOLTS	AMPS	VOLTS	AMPS	I_{th} = 10A
120	6	120	6	125	0.55	1V 10µA MIN.
240	3	240	3	250	0.27	50V 100mA MAX.
380	1.9	380	1.9			
480	1.5	480	1.5			
500	1.4	500	1.4			
600	1.2					

ENVIRONMENTAL		APPROVALS
IP66 NEMA 1,4,12,13		UL
TEMP RANGE	: -25°C TO 85°C -13°F TO 185°F	CSA
STORAGE	: -40°C TO 85°C -40°F TO 185°F	IEC 947-5-1
SHOCK	: 50G PER IEC 68-2-27	EN50047
VIBRATION	: 10G PER IEC 68-2-6	

DRAWN	M. LOCH	3/93
CHECK	I. WEIR	3/93
DESIGN	J. BOYD	3/93
AUTHORISN	P. TRICKETT	3/93

THE COPYRIGHT OF THIS DRAWING IS THE PROPERTY OF HONEYWELL LTD. THE DRAWING IS SUPPLIED IN CONFIDENCE AND MUST NOT BE USED FOR ANY PURPOSE OTHER THAN THAT FOR WHICH IT IS SUPPLIED.

THIRD ANGLE PROJECTION

SCALE 1:1

DIMENSIONS ARE IN MM/INCHES.

MODIFY ON CAD SYSTEM ONLY