PCB Support

561-LMSP125, 561-LMSP250, 561-LMSP312, 561-LMSP375, 561-LMSP437, 561-LMSP500, 561-LMSP625, 561-LMSP750, 561-LMSP875, 561-LMSP1000, 561-TMSP125, 561-TMSP250, 561-TMSP312, 561-TMSP375, 561-TMSP437, 561-TMSP500, 561-TMSP625, 561-TMSP750, 561-TMSP875, 561-TMSP1000

Date Last Revised: 05-19-10

LMSP

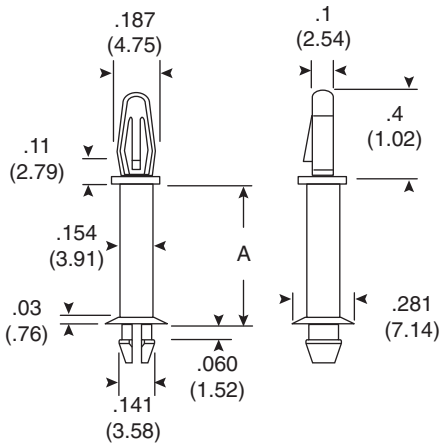

TMSP

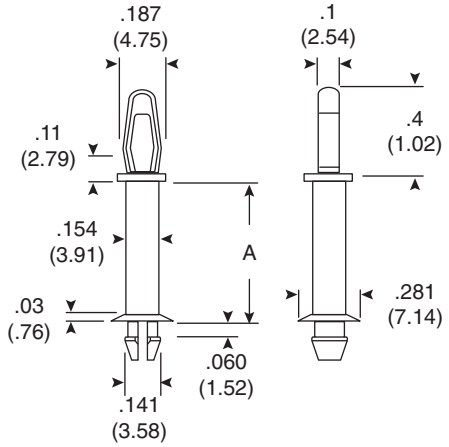

Dimensions: in. (mm)

- Spring end fits .156" hole
- Lock or tension end fits .125" hole
- Panel thickness 1/16"

SPECIFICATIONS

Mouser Num.	Description	A in. (mm)		Mouser Num.	Description	A in. (mm)
561-LMSP125	LMSP125	.125 (3.175)		561-TMSP125	TMSP125	.125 (3.175)
561-LMSP250	LMSP250	.25 (6.35)		561-TMSP250	TMSP250	.25 (6.35)
561-LMSP312	LMSP312	.312 (7.93)		561-TMSP312	TMSP312	.312 (7.93)
561-LMSP375	LMSP375	.375 (9.53)		561-TMSP375	TMSP375	.375 (9.53)
561-LMSP437	LMSP437	.437 (11.1)		561-TMSP437	TMSP437	.437 (11.1)
561-LMSP500	LMSP500	.5 (12.7)		561-TMSP500	TMSP500	.5 (12.7)
561-LMSP625	LMSP625	.625 (15.88)		561-TMSP625	TMSP625	.625 (15.88)
561-LMSP750	LMSP750	.75 (19.05)		561-TMSP750	TMSP750	.75 (19.05)
561-LMSP875	LMSP875	.875 (22.25)		561-TMSP875	TMSP875	.875 (22.25)
561-LMSP1000	LMSP1000	1 (25.4)		561-TMSP1000	TMSP1000	1 (25.4)

Available from Mouser Electronics
1-800-346-6873 / www.mouser.com

EPD-200450

Specifications are subject to change without notice. No liability or warranty implied by this information. Environmental compliance based on producer documentation.

Mouser Electronics

Authorized Distributor

Click to View Pricing, Inventory, Delivery & Lifecycle Information:

Eagle Plastic Devices:

561-TMSP500 561-LMSP875 561-TMSP625 561-LMSP1000 561-LMSP750 561-LMSP125 561-TMSP1000 561-LMSP437 561-LMSP250 561-LMSP375 561-TMSP125 561-LMSP625 561-LMSP312 561-LMSP500 561-TMSP312 561-TMSP375 561-TMSP250 561-TMSP750 561-TMSP875 561-TMSP437