Wantai Mini Stepper Product Specifications

PM42L-048-17

General Specifications	
Item	Specification
Step Accuracy	±7%
Temperature Rise	80°C Max
Ambient Temperature	-20°C~+50°C
Insulation Resistance	100MΩ Min., 500VDC
Dielectric Strength	500 VAC for one minute

Electrical Specifications										
Model No.	Step Angle	No. of Phase	Rated Voltage	Rated Current	Phase Resistance	Phase Inductance	Holding Torque	# of Leads	Detent Torque	Weight
	°		V	A	Ω	mH	g-cm		g-cm	g
PM42L-048-17	7.5	4	12	0.28	43	27	950	6	120	138

Mechanical Dimensions

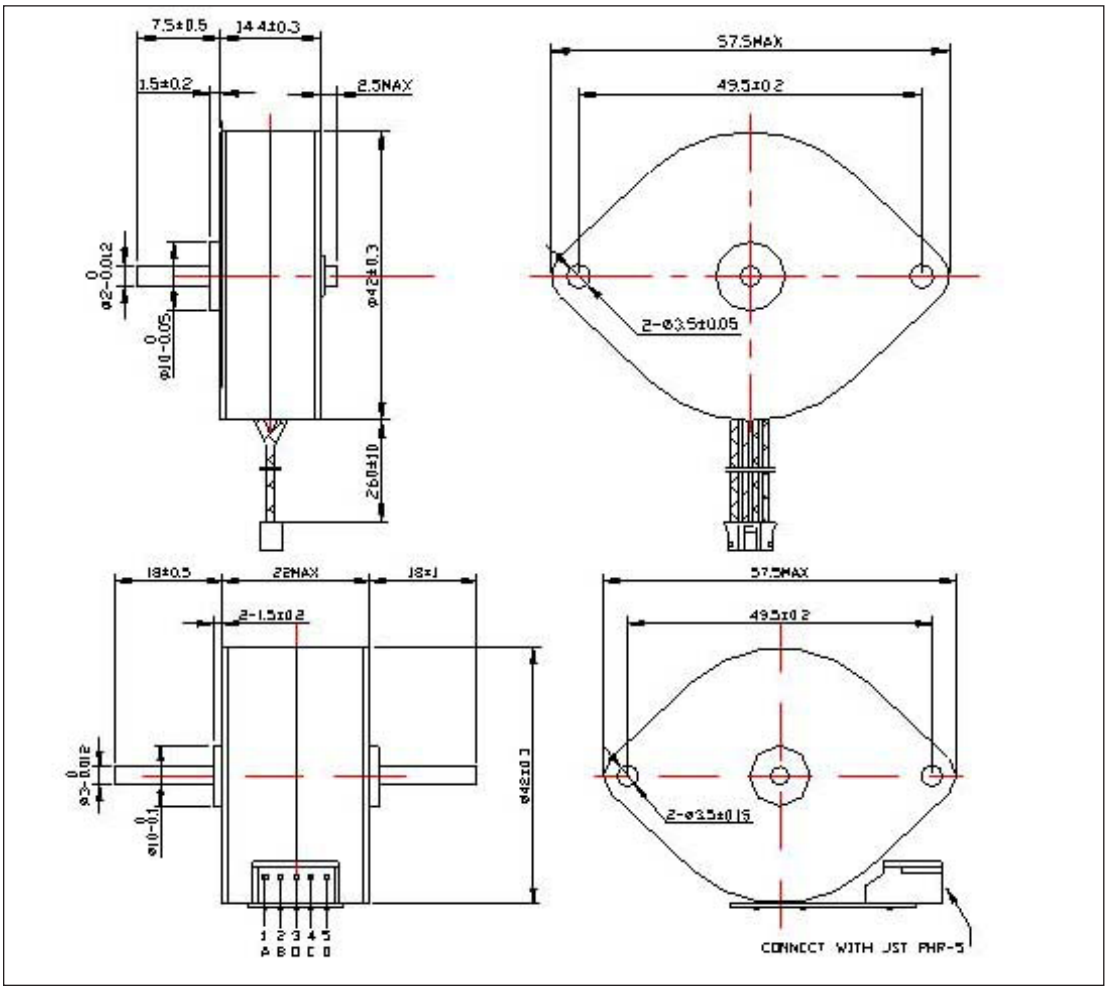

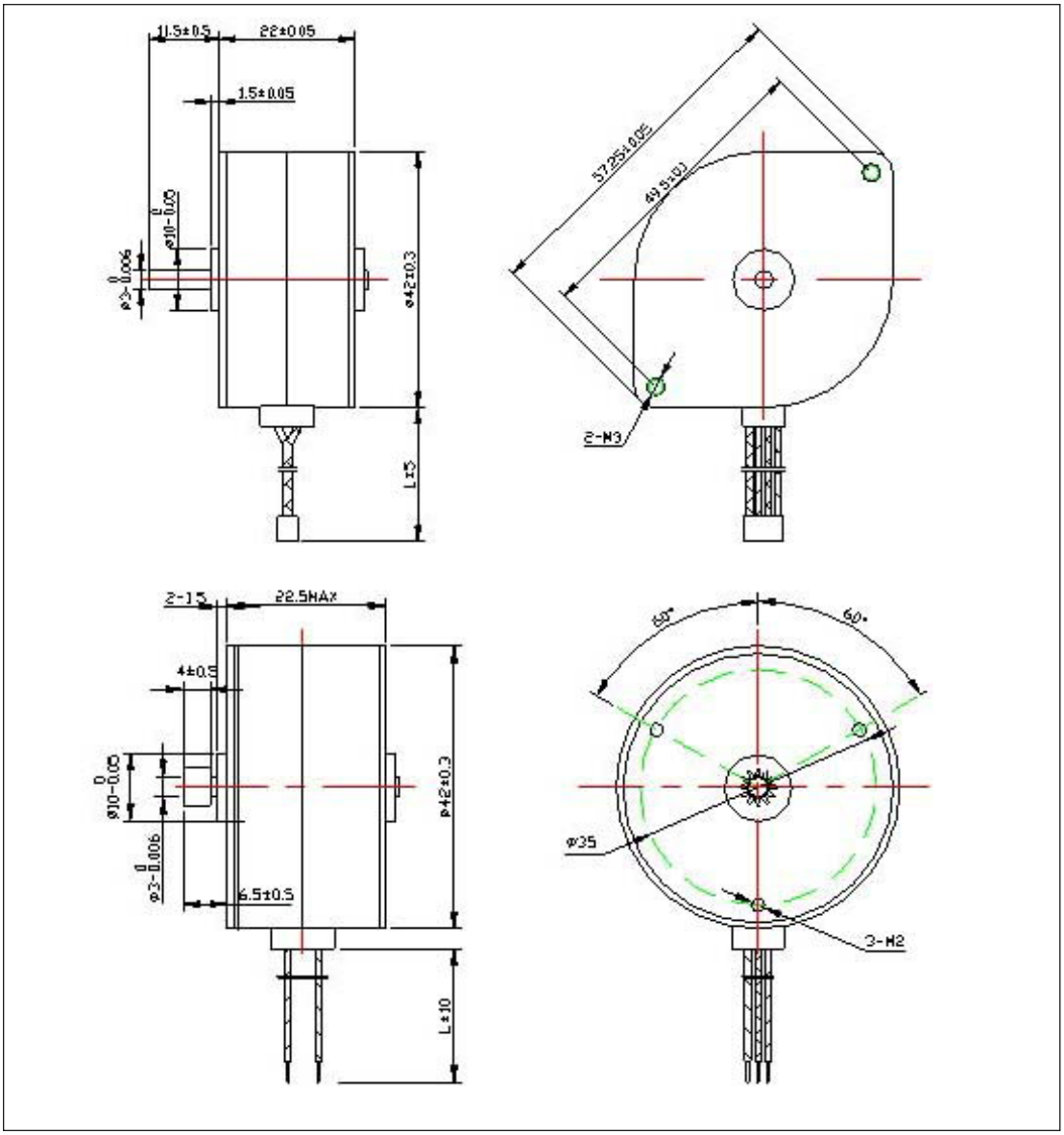
11.5±0.5
22±0.05
1.5±0.05
ø10-0.05 0
ø3-0.006 0
ø42±0.3
L±5
57.25±0.05
49.5±0.1
2-M3
2-1.5
22.5MAX
4±0.5
ø10-0.05 0
ø3-0.006 0
6.5±0.5
ø42±0.3
L±10
60°
60°
ø25
3-M2

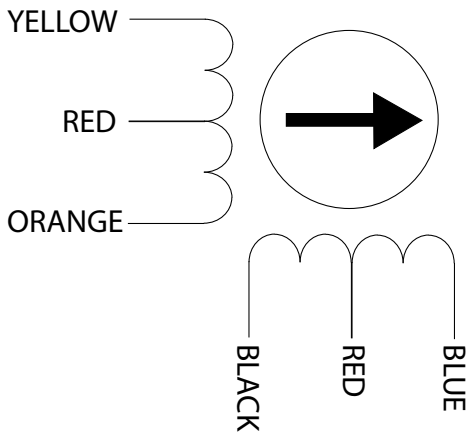
YELLOW
RED
ORANGE
BLACK
RED
BLUE