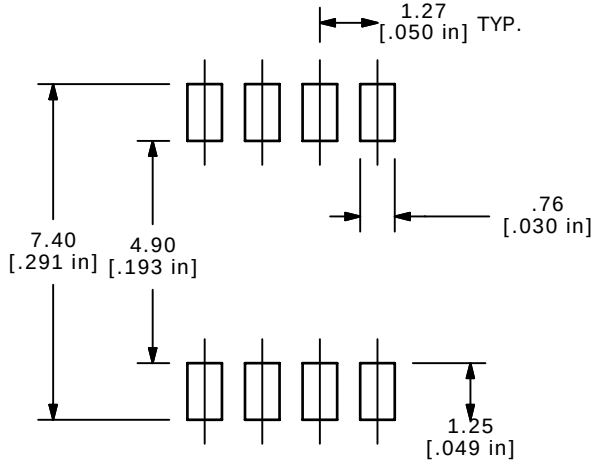

PC LAYUTT

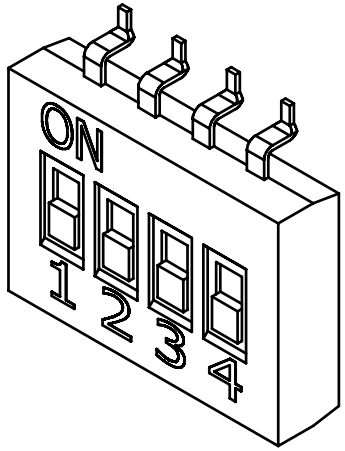

ISOMETRIC

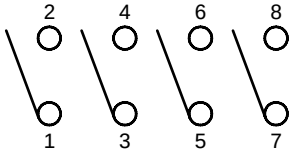

CIRCUIT LAYOUT

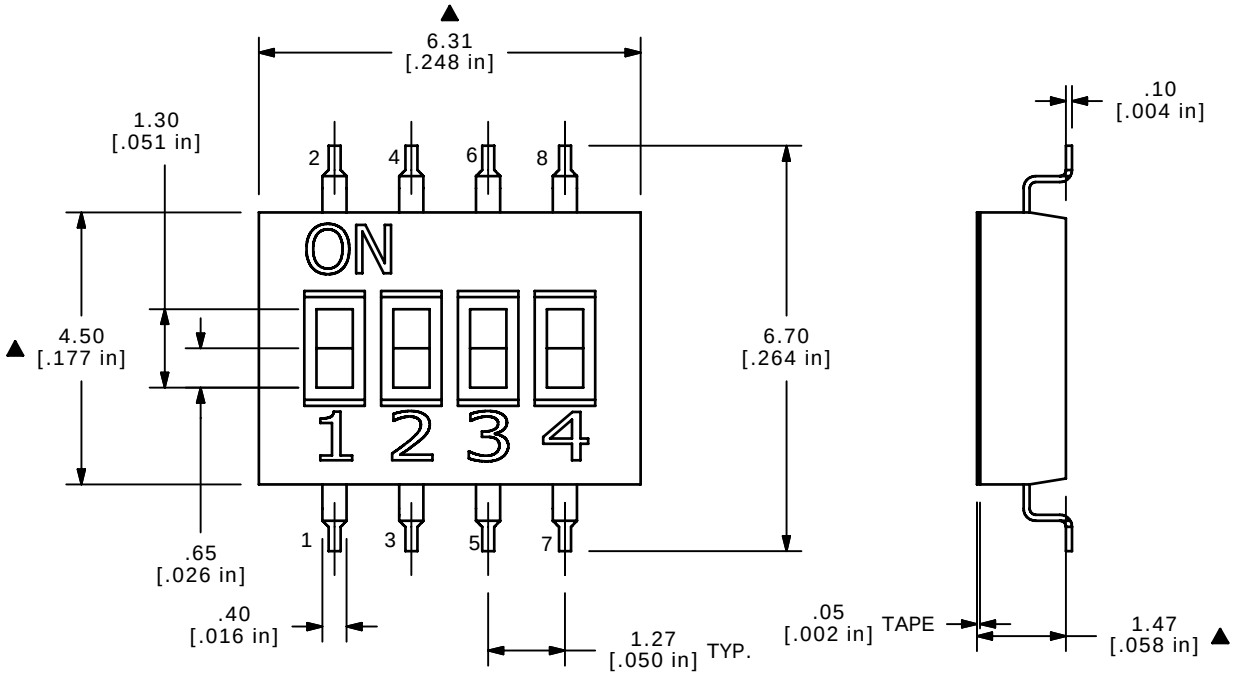

NOTE:
1. ALL DIMENSIONS IN MM [INCH]
2. GENERAL TOLERENCE: X.X=± 0.4
   X.XX=± 0.25
3. TERMINAL NUMBERS FOR REF. ONLY.
▲4. OPERATING FORCE: 500± 100 gf
5. TRAVEL: 0.6± 0.25 mm
6. CONTACT RATING: 25mA, 24VDC
7. CONTACT RESISTANCE: 100mΩ MAX.
8. INSULATION RESISTANCE: 100MΩ MIN @ 500VDC
9. DIELECTRIC STRENGTH: 300VAC 1 MIN.
10. LIFE: 1,000 CYCLES.
11. OPERATING TEMPERATURE: -40˚C TO 85˚C
▲12. PACKAGING: 75 PCS TUBE
13. ▲ DENOTES CRITICAL PARAMETER.
14. 2002/95/EC (ROHS) COMPLIANT
15. ALL SWITCHES SHIPPED IN THE 'ON' POSITION

REV	PCR NO	DESCRIPTION	DATE	BY
D	17465	'ON' POSITION NOTE ADDED	7/13/07	BLR
C	16914	REMOVE DIP NOTE	1/24/07	TN
B	16912	DIP FROM FRONT TO BACK SIDE	1/23/07	TN
A	15871	RELEASED FOR PRODUCTION	3/16/06	PH

THE INFORMATION CONTAINED IN THIS DOCUMENT IS PROPRIETARY TO E-SWITCH AND IS NOT TO BE COPIED OR TRANSFERRED

E-SWITCH

TITLE KAN1104RT

SCALE	DATE	DR	DWG	REV
8:1	7/13/2007	BLR	N111202	D