SPECIFICATION FOR LCD MODULE

Model No. ___TM320240CCD__

Prepared by:	**Date:**
Checked by :	**Date:**
Verified by :	**Date:**
Approved by:	**Date:**

TIANMA MICROELECTRONICS CO., LTD

REVISION RECORD

Date	Ref. Page	Revision No.	Revision Items	Check & Approval

1 General Specifications:

1.1 Display type: FSTN

1.2 Display color*:

Display color: Blue-Black

Background: White

1.3 Polarizer mode: Transflecive/Positive

1.4 Viewing Angle: 6:00

1.5 Driving Method: 1/240 Duty 1/16 Bias

1.6 Backlight: CCFL

* Color tone is slightly changed by temperature and driving voltage.

1.7 Driver: S6B2086X01-T0RA(KS0086TQ)

1.8 Data Transfer: 8 Bit Parallel

1.9 Operating Temperature: 0----+50℃

Storage Temperature: -20----+60℃

1.10 Outline Dimensions: Refer to outline drawing on next page

1.11 Dot Matrix: 320 X 240 Dots

1.12 Dot Size: 0.33X0.33(mm)

1.13 Dot Pitch: 0.36X0.36 (mm)

1.14 Weight: 240g

2 Outline Drawing

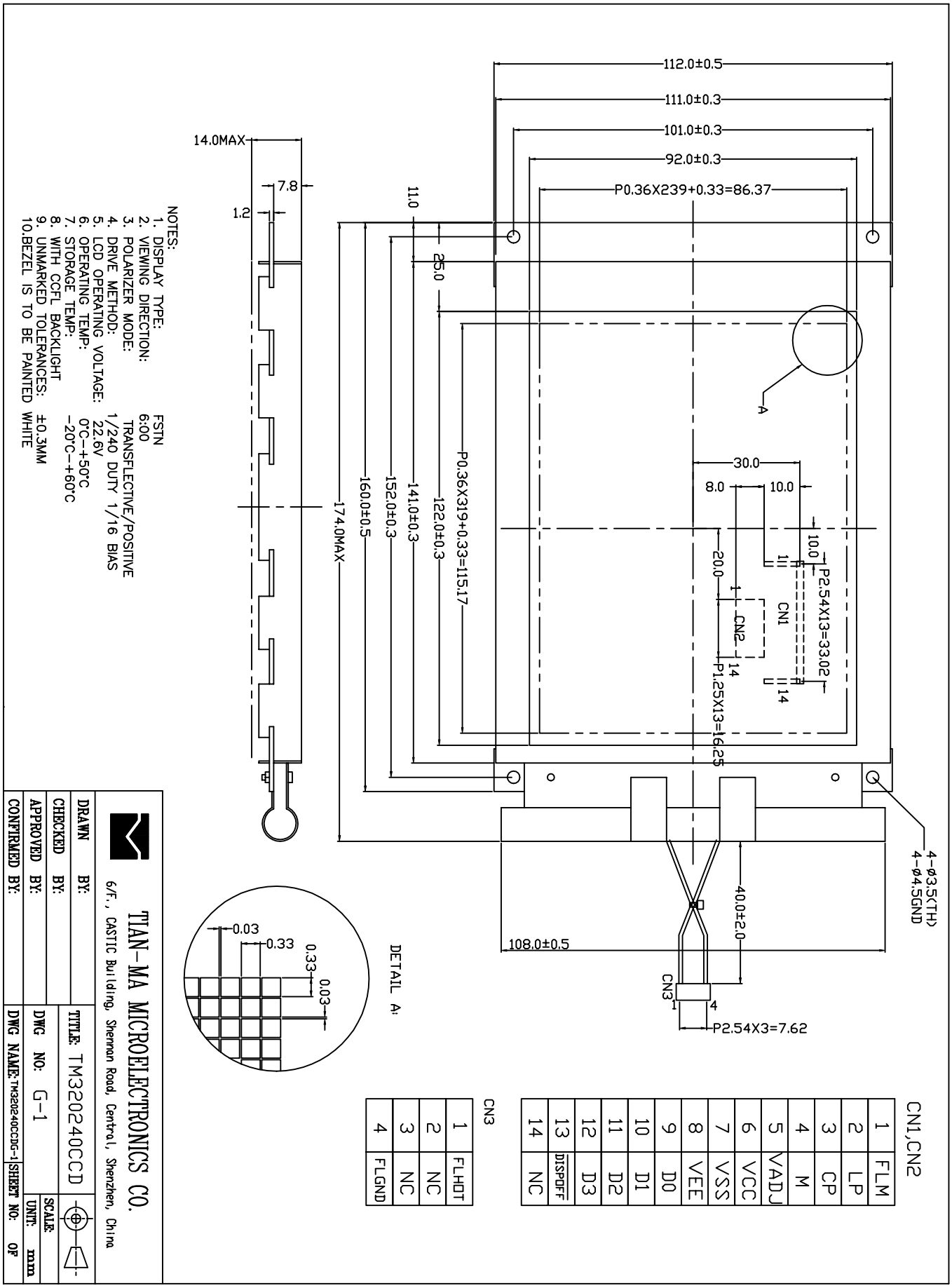

3 LCD Module Part Numbering System

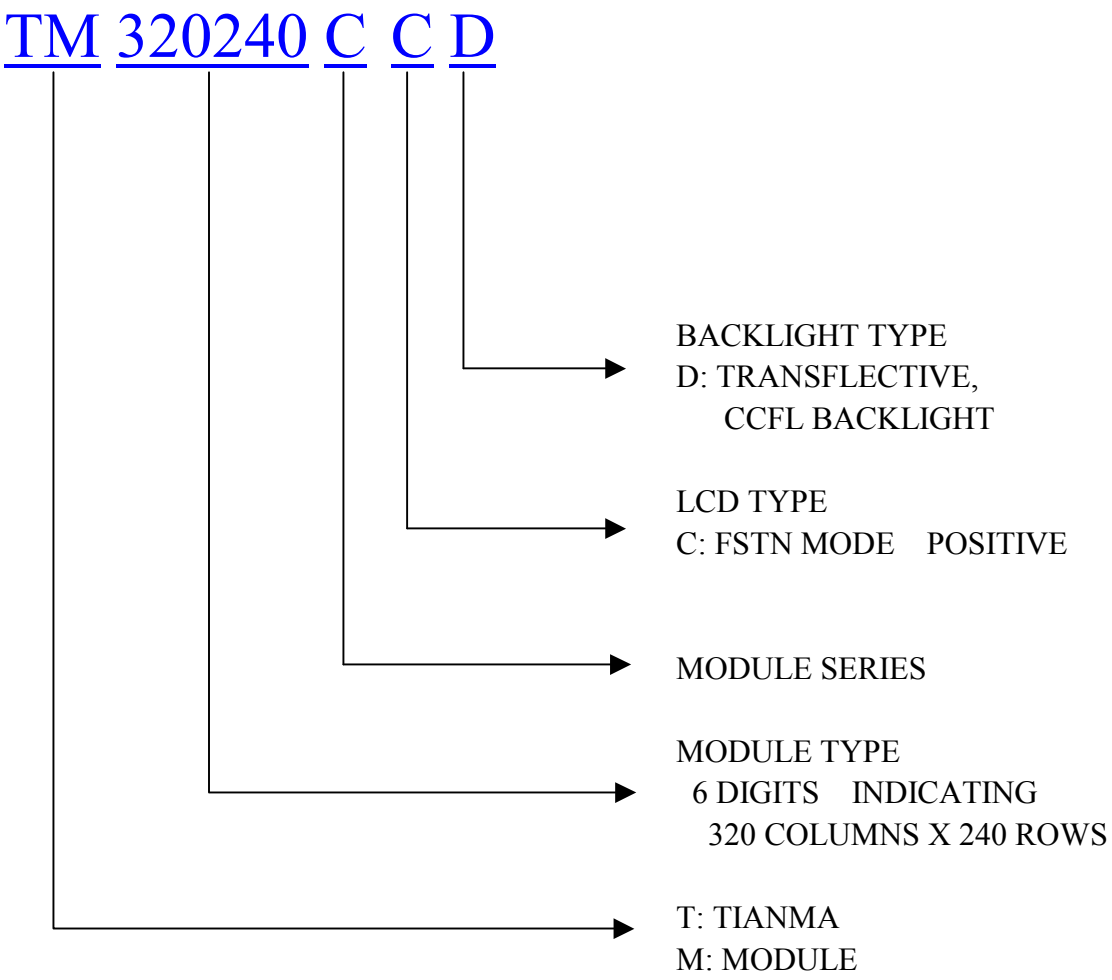

4 Circuit Block Diagram

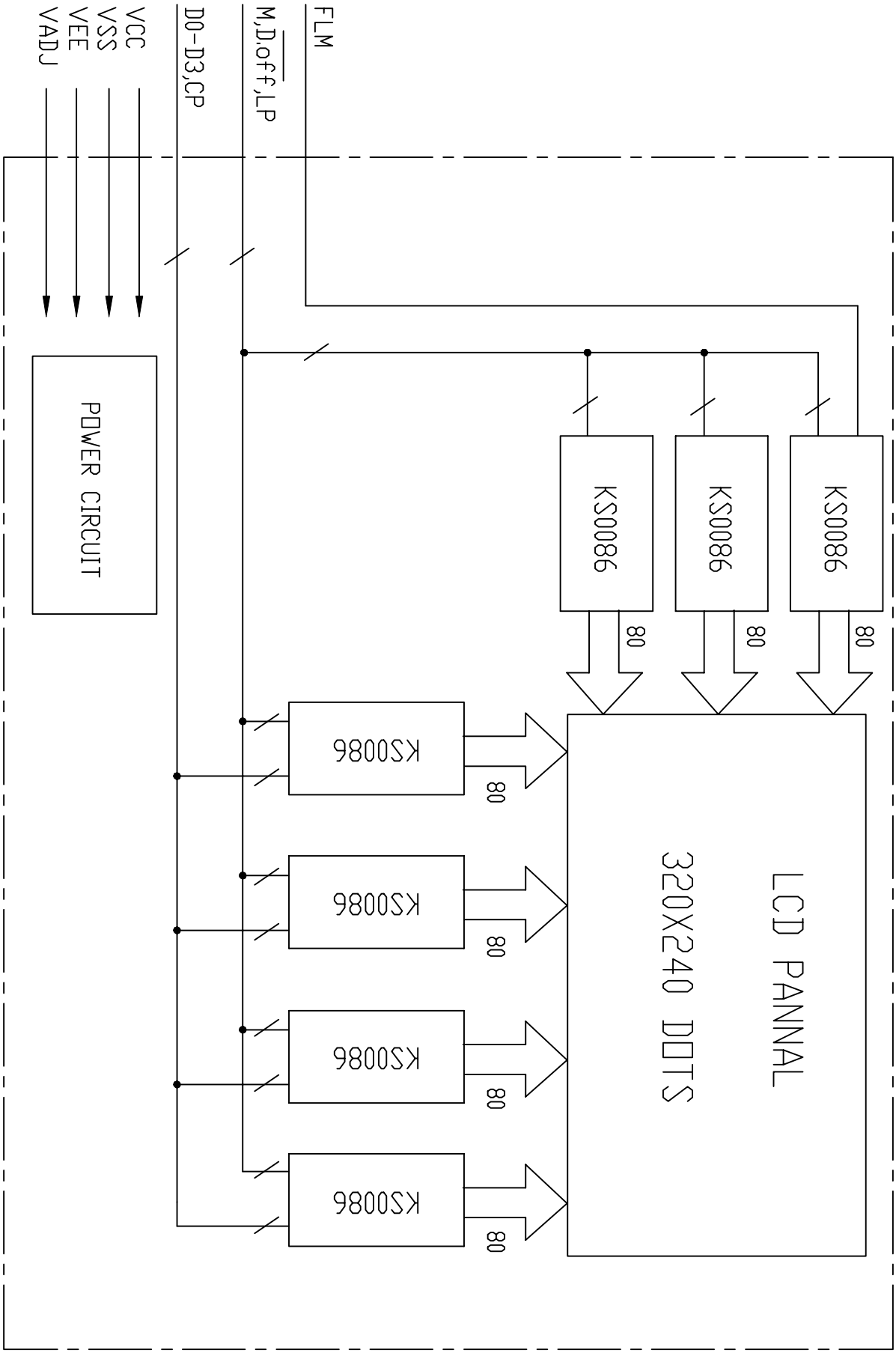

5 Absolute Maximum Ratings

Item	Symbol	Min.	Max.	Unit	Remark
Power Supply Voltage	$V_{DD}-V_{SS}$	-0.3	6.0	V	
LCD Driving Voltage	V_{LCD}	-	28.0		
Operating Temperature Range	T_{OP}	0	+50	℃	No Condensation
Storage Temperature Range	T_{ST}	-20	+6 0		

6 Electrical Specifications and Instruction Code

6.1 Electrical characteristics

Item		Symbol	Min.	Typ.	Max.	Unit
Supply Voltage (Logic)		$V_{DD}-V_{SS}$	4.75	5.0	5.25	V
Supply Voltage (LCD Drive)		V_{LCD}	-	22.6	-	V
Input Signal Voltage	High	V_{IH} (V_{DD}=5.0)	$0.8V_{DD}$	-	V_{DD}+0.3	V
	Low	V_{IL} (V_{DD}=5.0)	0	-	$0.2\ V_{DD}$	V
Supply current (Logic)		I_{DD} (V_{DD}- V_{SS}=5.0V)	-	-	34.0	mA
Supply current (LCD Drive)		I_{EE}	-	-	5.0	mA
Supply current (CCFL)		I_{CCFL}	-	5.0	-	mA

6.2 Interface Signals

Pin No.	Symbol	Level	Description
1	**FLM**	**H/L**	**Indicates the beginning of each display cycle**
2	**LP**	**H→L**	**Data latch pulse**
3	**CP**	**H→L**	**Data shift clock pulse**
4	**M**	**H/L**	**Alternate Signal For LCD Driver**
5	**Vadj**	**--**	**Operating voltage for LCD(variable)**
6	**VCC**	**5.0V**	**Supply voltage for logic and LCD(+)**
7	**VSS**	**0V**	**Ground**
8	**VEE**	**-17.6V**	**Supply voltage for LCD(-)**
9	**D0**	**H/L**	**Data Bit 0**
10	**D1**	**H/L**	**Data Bit 1**
11	**D2**	**H/L**	**Data Bit 2**
12	**D3**	**H/L**	**Data Bit 3**
13	**$\overline{\text{DISPOFF}}$**	**H/L**	**H:Display on; L:Display off**
14	**NC**	**--**	**No Signal**

6.3 Interface Timing Chart

8080 family interface timing

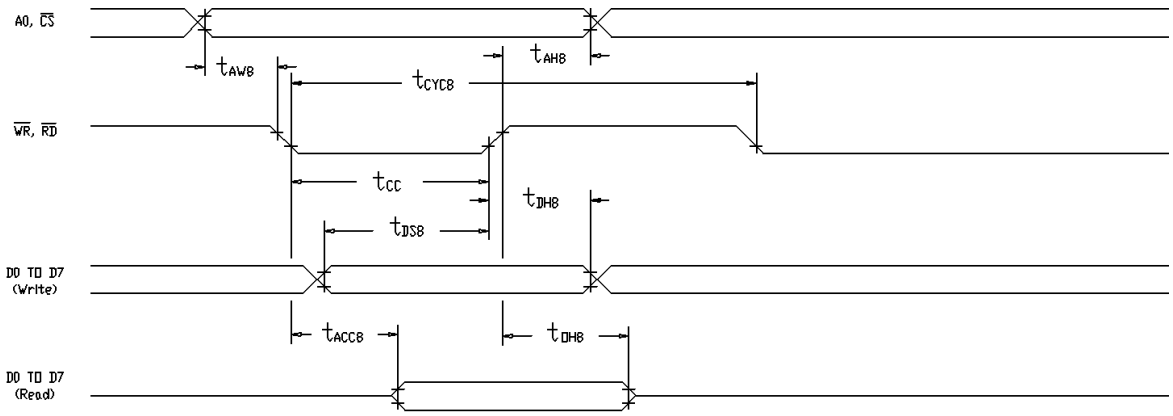

Ta=-20 to 75 deg. C

Signal	Symbol	Parameter	V_{DD}=4.5 to 5.5V		V_{DD}=2.7 to 5.5V		Unit	Condition
			min	max	min	max		
A0,$\overline{CS}$	t_{AH8}	Address hold time	10	-	10	-	ns	CL=100pF
	t_{AW8}	Address setup time	0	-	0	-	ns	
$\overline{WR}$,$\overline{RD}$	t_{CYC8}	System cycle time	See note.	-	See note.	-	ns	
	t_{CC}	Strobe pulsewidth	120	-	150	-	ns	
D0 to D7	t_{DS8}	Data setup time	120	-	120	-	ns	
	t_{DH8}	Data hold time	5	-	5	-	ns	
	t_{ACC8}	$\overline{RD}$ access time	-	50	-	80	ns	
	t_{OH8}	Output disable time	10	50	10	55	ns	

Note

For memory control and system control commands:

$t_{CYC8} = 2\ t_C + t_{CC} + t_{CEA} + 75 > t_{ACV} + 245$

for all other commands:

$t_{CYC8} = 4\ t_C + t_{CC} + 30$

6800 family interface timing

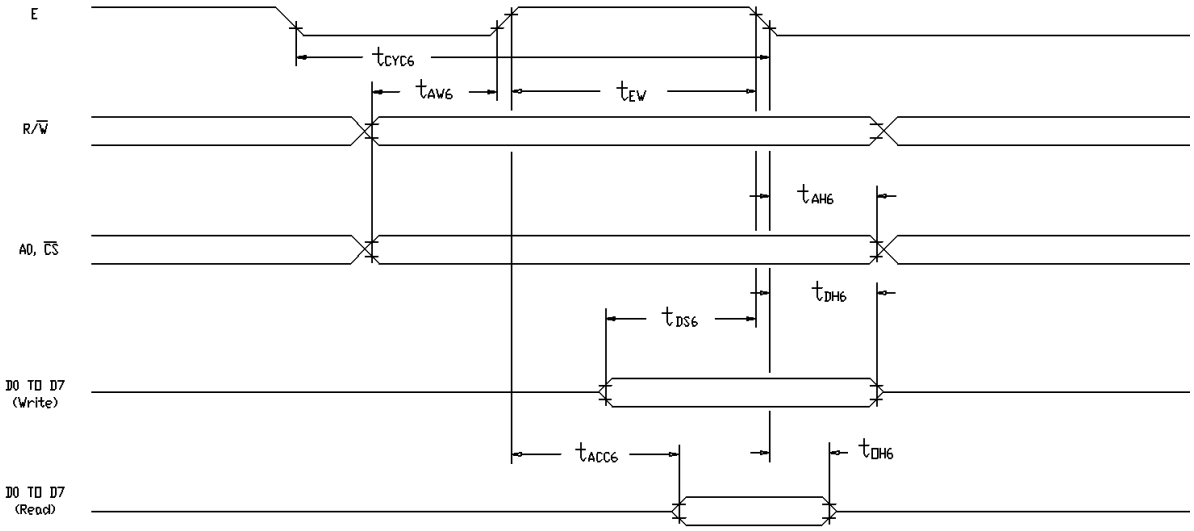

Note
t_{CYC6} indicates the interval during which CS is LOW and E is HIGH

Ta=-20 to 75 deg. C

Signal	Symbol	Parameter	V_{DD}=4.5 to 5.5V		V_{DD}=2.7 to 5.5V		Unit	Condition
			min	Max	min	max		
A0,$\overline{CS}$ R/$\overline{W}$	t_{CYC6}	System cycle time	See note.	-	See note.	-	ns	CL=100pF
	t_{AW6}	Address setup time	0	-	10	-	ns	
	t_{AH6}	Address hold time	0	-	0	-	ns	
D0 to D7	t_{DS6}	Data setup time	100	-	120	-	ns	
	t_{DH6}	Data hold time	0	-	0	-	ns	
	t_{OH6}	Output disable time	10	50	10	75	ns	
	t_{ACC6}	Access time	-	85	-	130	ns	
E	t_{EW}	Enable pulsewidth	120	-	150	-	ns	

Note
For memory control and system control commands:

$t_{CYC8} = 2\ t_C + t_{CC} + t_{CEA} + 75 > t_{ACV} + 245$

for all other commands:

$t_{CYC8} = 4\ t_C + t_{EW} + 30$

6.4 Instruction Code

Class	Command	Code											Command description	Number of Bytes
		RD	WR	A0	D7	D6	D5	D4	D3	D2	D1	D0		
System cotrol	SYSTEM SET	1	0	1	0	1	0	0	0	0	0	0	Initialize device and display	8
	SLEEP IN	1	0	1	0	1	0	1	0	0	1	1	Enter standby mode	0
Display control	DISP ON/OFF	1	0	1	0	1	0	1	1	0	0	D	Enable and disable display and display flashing	1
	SCROLL	1	0	1	0	1	0	0	0	1	0	0	Set display start address and display regions	10
	CSRFORM	1	0	1	0	1	0	1	1	1	0	1	Set cursor type	2
	CGRAM ADR	1	0	1	0	1	0	1	1	1	0	0	Set start address of character generator RAM	2
	CSRDIR	1	0	1	0	1	0	0	1	1	CD	CD	Set direction of cursor movement	0
	HDOT SCR	1	0	1	0	1	0	1	1	0	1	0	Set horizontal scroll position	1
	OVLAY	1	0	1	0	1	0	1	1	0	1	1	Set display overlay format	1
Drawing control	CSRW	1	0	1	0	1	0	0	0	1	1	0	Set cursor address	2
	CSRR	0	1	1	0	1	0	0	0	1	1	1	Read cursor address	2
Memory control	MWRITE	1	0	1	0	1	0	0	0	0	1	0	Write to display memory	-
	MREAD	0	1	1	0	1	0	0	0	0	1	1	Read from display memory	-

Notes

1. In general,the internal registers of the SED1335F/1336F are modified as each command parameter is input.However,the microprocessor does not have to set all the parameters of a command and may send a new command before all parameters have been input.The internal registers for the parameters that have been input will have been changed but the remaining parameter registers are unchanged.

   2-byte parameters (where two bytes are treated as 1 data item) are handled as follows:

   a.CSRW,CSRR:Each byte is processed individuallly. The microprocessor may read or write just the low byte of the cursor address.

   b.SYSTEM SET,SCROLL,CGRAM ADR:Both parameter bytes are processed together.If the command is changed after half of the parameters has been input, the single byte is ignored.
2. APL and APH are 2-byte parameters, but are treated as two 1-byte parameters.

7 Optical Characteristics

7.1 Optical Characteristics Ta=25℃

Item		Symbol	Condition		Min.	Typ.	Max.	Unit
Viewing Angle		θ_x	$C_r \geq 2$	$\theta_y=0°$	-30	--	20	Deg
		θ_y		$\theta_x=0°$	-30	--	30	
Contrast Ratio		C_r	$\theta_x=0°$ $\theta_y=0°$		3.0	-	-	
Response Time	Turn on	T_{on}	$\theta_x=0°$ $\theta_y=0°$		-	-	350	ms
	Turn off	T_{off}			-	-	350	

7.2 Definition of Optical Characteristics

7.2.1 Definition of Viewing Angle

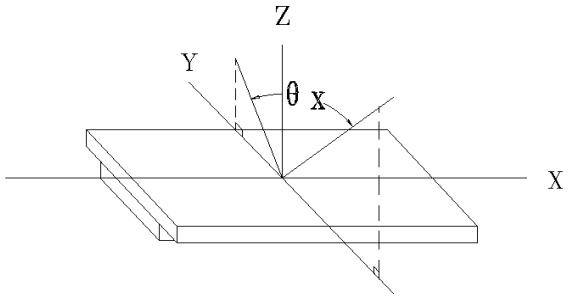

Top
Bottom

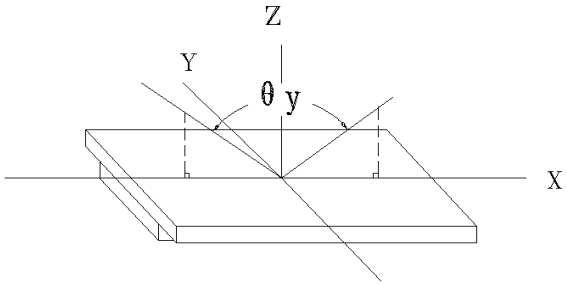

Top
Bottom

7.2.2 Definition of Contrast Ratio

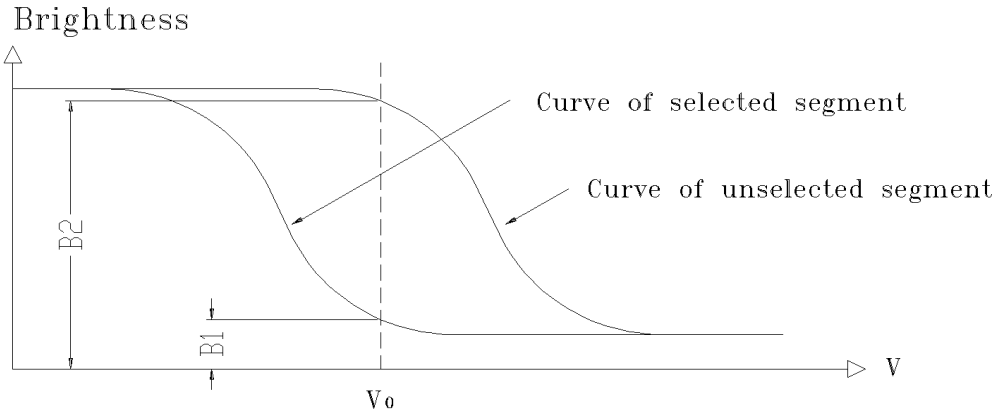

$$\text{Contrast Ratio} = B2/B1 = \frac{\text{unselected state brightness}}{\text{selected state brightness}}$$

Measuring Conditions:

1) Ambient Temperature: 25℃ ; 2) Frame frequency: 64Hz

7.2.3 Definition of Response time

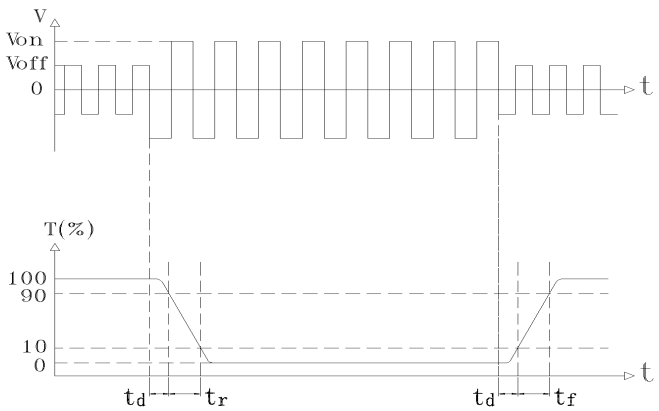

Turn on time: $t_{on} = t_d + t_r$ Turn off time: $t_{off} = t_d + t_f$

Measuring Condition:

1) Operating Voltage: 22.6V ; 2) Frame frequency: 64Hz

8 Reliability

8.1 Content of Reliability Test Ta=25℃

No.	Test Item	Content of Test	Test condition
1	High Temperature Storage	Endurance test applying the high storage temperature for a long time	60℃ 96H
2	Low Temperature Storage	Endurance test applying the low storage temperature for a long time	-20℃ 96H
3	High Temperature Operation	Endurance test applying the electric stress (voltage & current) and the thermal stress to the element for a long time	50℃ 96H
4	Low Temperature Operation	Endurance test applying the electric stress under low temperature for a long time	0℃ 96H
5	High Temperature /Humidity Storage	Endurance test applying the high temperature and high humidity storage for a long time	40℃ 90%RH 96H
6	Temperature Cycle	Endurance test applying the low and high temperature cycle -20℃←→25℃←→60℃←→25℃ 30min 5min 30min 5min ←——————————→ 1 cycle	-20℃/60℃ 10 cycles
7	Vibration Test (package state)	Endurance test applying the vibration during transportation	10Hz~150Hz, 50m/s^2, 40min
8	Shock Test (package state)	Endurance test applying the shock during transportation	Half- sine wave, 100m/s^2, 11ms
9	Atmospheric Pressure Test	Endurance test applying the atmospheric pressure during transportation by air	40kPa 16H

8.2 Failure Judgment Criterion

Criterion Item	Test Item No.									Failure Judgement Criterion
	1	2	3	4	5	6	7	8	9	
Basic Specification	√	√	√	√	√	√	√	√	√	Out of the basic Specification
Electrical specification	√	√	√	√	√					Out of the electrical specification
Mechanical Specification							√	√		Out of the mechanical specification
Optical Characteristic	√	√	√	√	√	√			√	Out of the optical specification
Note	For test item refer to 8.1									
Remark	Basic specification = Optical specification + Mechanical specification									

9 QUALITY LEVEL

Examination or Test	At T_a=25℃ (unless otherwise stated)	Inspection				
		Min.	Max.	Unit	IL	AQL
External Visual Inspection	Under normal illumi-nation and eyesight condition, the dis-tance between eyes and LCD is 25cm.	See Appendix A			II	Major 1.0 Minor 2.5
Display Defects	Under normal illumi-nation and eyesight condition, display on inspection.	See Appendix B			II	Major 1.0 Minor 2.5
Note: Major defects: Open segment or common, Short, Serious damages, Leakage Miner defects: Others Sampling standard conforms to GB2828						

10 Precautions for Use of LCD Modules

10.1 Handling Precautions

10.1.1 The display panel is made of glass. Do not subject it to a mechanical shock by dropping it from a high place, etc.

10.1.2 If the display panel is damaged and the liquid crystal substance inside it leaks out, be sure not to get any in your mouth, if the substance comes into contact with your skin or clothes, promptly wash it off using soap and water.

10.1.3 Do not apply excessive force to the display surface or the adjoining areas since this may cause the color tone to vary.

10.1.4 The polarizer covering the display surface of the LCD module is soft and easily scratched. Handle this polarizer carefully.

10.1.5 If the display surface is contaminated, breathe on the surface and gently wipe it with a soft dry cloth. If still not completely clear, moisten cloth with one of the following solvents:

- Isopropyl alcohol
- Ethyl alcohol

Solvents other than those mentioned above may damage the polarizer. Especially, do not use the following:

- Water
- Ketone
- Aromatic solvents

10.1.6 Do not attempt to disassemble the LCD Module.

10.1.7 If the logic circuit power is off, do not apply the input signals.

10.1.8 To prevent destruction of the elements by static electricity, be careful to maintain an optimum work environment.

a. Be sure to ground the body when handling the LCD Modules.

b. Tools required for assembly, such as soldering irons, must be properly ground.

c. To reduce the amount of static electricity generated, do not conduct assembly and other work under dry conditions.

d. The LCD Module is coated with a film to protect the display surface. Be care when peeling off this protective film since static electricity may be generated.

10.2 Storage precautions

10.2.1 When storing the LCD modules, avoid exposure to direct sunlight or to the light of fluorescent lamps.

10.2.2 The LCD modules should be stored under the storage temperature range. If the LCD modules will be stored for a long time, the recommend condition is:

Temperature : 0℃ ～ 40℃

Relatively humidity: ≤80%

10.2.3 The LCD modules should be stored in the room without acid, alkali and harmful gas.

10.3 The LCD modules should be no falling and violent shocking during transportation, and also should avoid excessive press, water, damp and sunshine.

Appendix A

Inspection items and criteria for appearance defects

Items	Contents	Criteria		
Leakage		Not permitted		
Rainbow		According to the limit specimen		
Polarizer	Wrong polarizer attachment	Not permitted		
	Bubble between polarizer and glass	Not counted	Max. 3 defects allowed	
		$\phi<0.3$mm	$0.3\text{mm}\leqslant\phi\leqslant0.5$mm	
	Scratches of polarizer	According to the limit specimen		
Black spot (in viewing area)	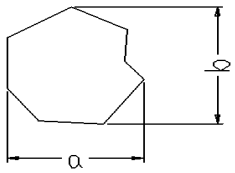	Not counted	Max. 3 spots allowed	Max. 3 spots (lines) allowed
		X<0.2mm	0.2mm≤X≤0.5mm	
		X=(a+b)/2		
Black line (in viewing area)	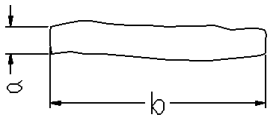	Not counted	Max. 3 lines allowed	
		a<0.02mm	0.02mm≤a≤0.05mm b≤2.0mm	
Progressive cracks	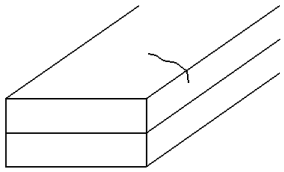	Not permitted		

Appendix B

Inspection items and criteria for display defects

Items	Contents	Critera		
Open segment or open common		Not permitted		
Short		Not permitted		
Wrong viewing angle		Not permitted		
Contrast radio uneven		According to the limit specimen		
Crosstalk		According to the limit specimen		
Pin holes and cracks in segment (DOT)	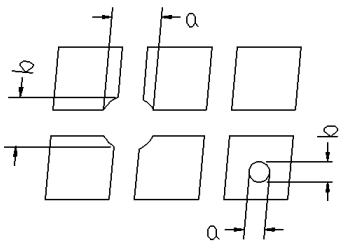	Not counted	Max.3 dots allowed	Max.3 dots allowed
		X<0.1mm	0.1mm≤X≤0.2mm	
		X=(a+b)/2		
	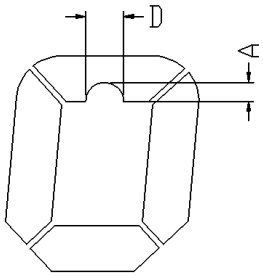	Not counted	Max.2 dots allowed	
		A<0.1mm	0.1mm≤A≤0.2mm D<0.25mm	
Black spot (in viewing area)	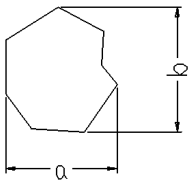	Not counted	Max.3 spots allowed	Max.3 spots (lines) allowed
		X<0.1mm	0.1mm≤X≤0.2mm	
		X=(a+b)/2		
Black line (in viewing area)	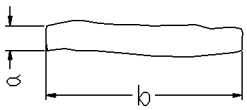	Not counted	Max.3 lines allowed	
		a<0.02mm	0.02mm≤a≤0.05mm b≤0.5mm	

Appendix B

Inspection items and criteria for display defects (continued)

<table>
<tr><th>Items</th><th>Content</th><th colspan="3">Critera</th></tr>
<tr><td rowspan="6">Transfor-
mation
of segment</td><td rowspan="3"> 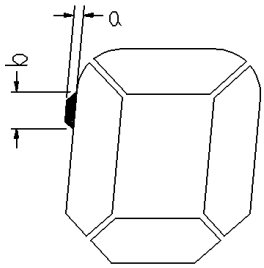
</td><td colspan="2">Not counted</td><td rowspan="6">Max.3
defects
allowed</td></tr>
<tr><td>x＜0.1mm</td><td>0.1mm≤x≤0.2mm</td></tr>
<tr><td colspan="2">x=(a+b)/2</td></tr>
<tr><td rowspan="2"> 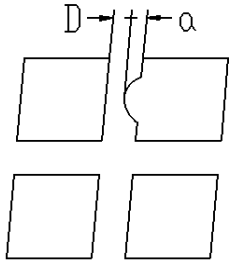
</td><td colspan="2">Not counted</td></tr>
<tr><td>a＜0.1mm</td><td>0.1mm≤a≤0.2mm
D>0</td></tr>
<tr><td> 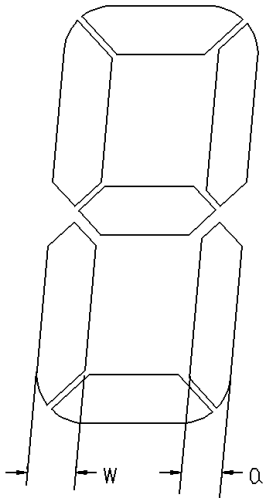
</td><td colspan="3">Max.2 defects allowed
0.8W≤a≤1.2W

a=measured value of width
W=nominal value of width</td></tr>
</table>