Main Product Characteristics:

V_{DSS}	600V
R_{DS}(on)	1.32Ω (typ.)
I_D	6A

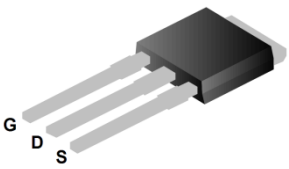

TO-251

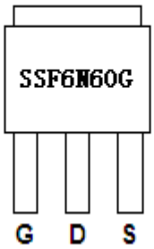

Marking and pin Assignment

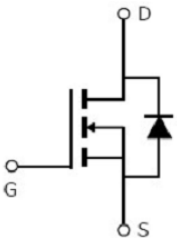

Schematic diagram

Features and Benefits:

- Advanced MOSFET process technology
- Special designed for PWM, load switching and general purpose applications
- Ultra low on-resistance with low gate charge
- Fast switching and reverse body recovery
- 150℃ operating temperature

Description:

It utilizes the latest processing techniques to achieve the high cell density and reduces the on-resistance with high repetitive avalanche rating. These features combine to make this design an extremely efficient and reliable device for use in power switching application and a wide variety of other applications.

Absolute max Rating:

Symbol	Parameter	Max.	Units
I_D @ TC = 25°C	Continuous Drain Current, V_{GS} @ 10V①	6	A
I_D @ TC = 100°C	Continuous Drain Current, V_{GS} @ 10V①	3.8	
I_{DM}	Pulsed Drain Current②	24	
P_D @TC = 25°C	Power Dissipation③	125	W
	Linear Derating Factor	1.00	W/°C
V_{DS}	Drain-Source Voltage	600	V
V_{GS}	Gate-to-Source Voltage	± 30	V
E_{AS}	Single Pulse Avalanche Energy @ L=30mH	421	mJ
I_{AS}	Avalanche Current @ L=30mH	5.3	A
T_J T_{STG}	Operating Junction and Storage Temperature Range	-55 to +150	°C

Thermal Resistance

Symbol	Characterizes	Typ.	Max.	Units
$R_{\theta JC}$	Junction-to-case③	—	1.00	℃/W
$R_{\theta JA}$	Junction-to-ambient (t ≤ 10s) ④	—	110	℃/W

Electrical Characterizes @T_A=25℃ unless otherwise specified

Symbol	Parameter	Min.	Typ.	Max.	Units	Conditions
$V_{(BR)DSS}$	Drain-to-Source breakdown voltage	600	—	—	V	V_{GS} = 0V, ID = 250μA
$R_{DS(on)}$	Static Drain-to-Source on-resistance	—	1.32	1.5	Ω	V_{GS}=10V,I_D = 3A
		—	2.92	—		T_J = 125℃
$V_{GS(th)}$	Gate threshold voltage	2	—	4	V	V_{DS} = V_{GS}, I_D = 250μA
		—	1.86	—		T_J = 125℃
I_{DSS}	Drain-to-Source leakage current	—	—	1	μA	V_{DS} = 600V,V_{GS} = 0V
		—	—	50		T_J = 125℃
I_{GSS}	Gate-to-Source forward leakage	—	—	100	nA	V_{GS} =30V
		—	—	-100		V_{GS} = -30V
Q_g	Total gate charge	—	15.6	—	nC	I_D = 6A,
Q_{gs}	Gate-to-Source charge	—	4.7	—		V_{DS}=480V,
Q_{gd}	Gate-to-Drain("Miller") charge	—	6.3	—		V_{GS} = 10V
$t_{d(on)}$	Turn-on delay time	—	13.8	—	ns	
t_r	Rise time	—	24.9	—		V_{GS}=10V, VDS=300V,
$t_{d(off)}$	Turn-Off delay time	—	35.5	—		R_{GEN}=25Ω,ID=6A
t_f	Fall time	—	22.5	—		
C_{iss}	Input capacitance	—	681	—	pF	V_{GS} = 0V
C_{oss}	Output capacitance	—	89	—		V_{DS} = 25V
C_{rss}	Reverse transfer capacitance	—	3.5	—		f = 1MHz

Source-Drain Ratings and Characteristics

Symbol	Parameter	Min.	Typ.	Max.	Units	Conditions
I_S	Continuous Source Current (Body Diode)	—	—	6	A	MOSFET symbol showing the integral reverse p-n junction diode. 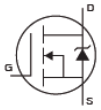
I_{SM}	Pulsed Source Current (Body Diode)	—	—	24	A	
V_{sd}	Diode Forward Voltage	—	0.91	1.4	V	I_S=6A, V_{GS}=0V
t_{rr}	Reverse Recovery Time	—	656	—	ns	T_J = 25°C, I_F =6A,
Q_{rr}	Reverse Recovery Charge	—	3513	—	nC	di/dt = 100A/μs

Test circuits and Waveforms

EAS test circuits:

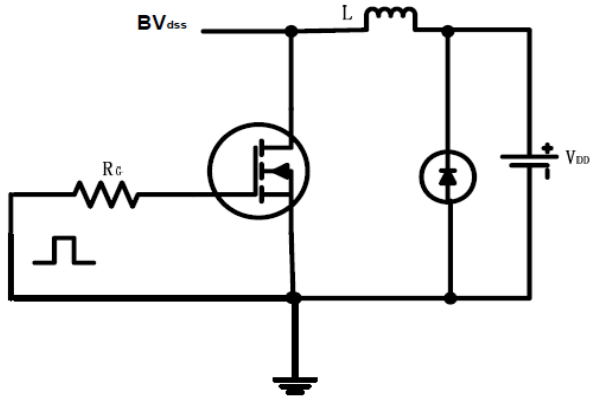

Gate charge test circuit:

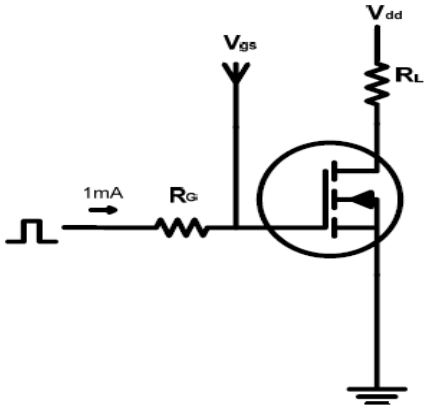

Switch Time Test Circuit:

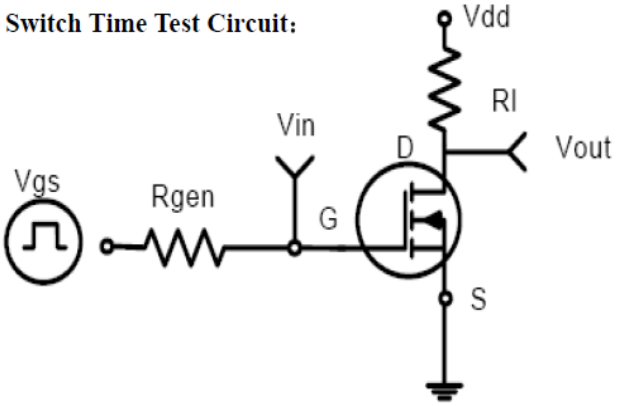

Switch Waveforms:

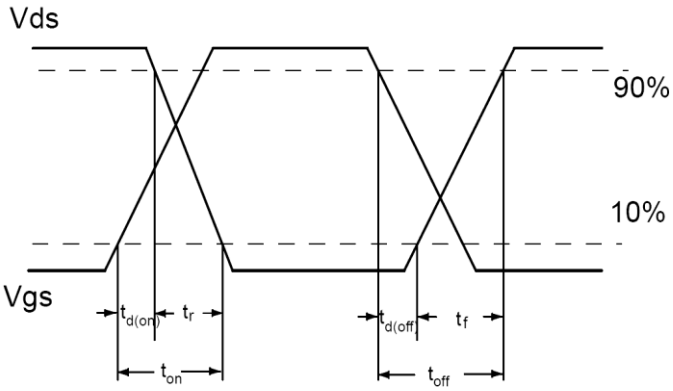

Notes:

①The maximum current rating is limited by bond-wires.

②Repetitive rating; pulse width limited by max. junction temperature.

③The power dissipation PD is based on max. junction temperature, using junction-to-case thermal resistance.

④The value of $R_{\theta JA}$ is measured with the device mounted on 1in 2 FR-4 board with 2oz. Copper, in a still air environment with TA =25°C

Typical electrical and thermal characteristics

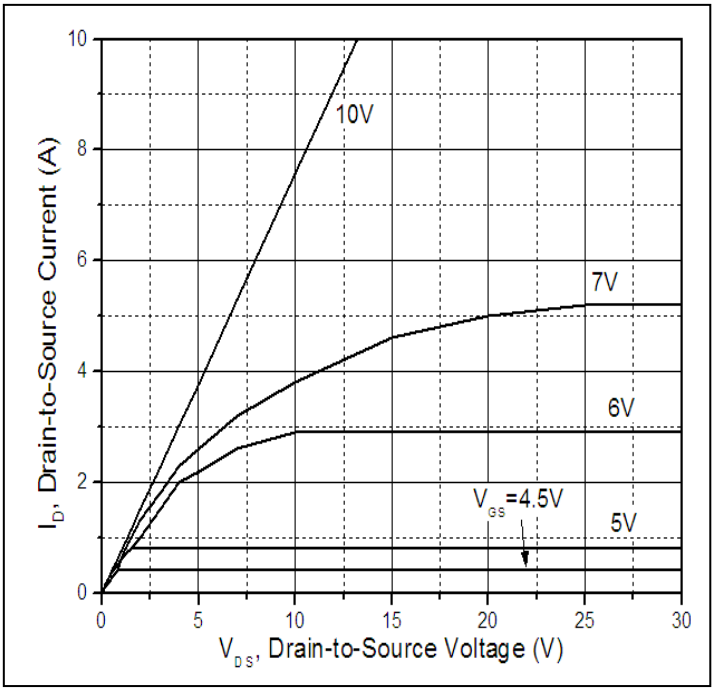

Figure 1: Typical Output Characteristics

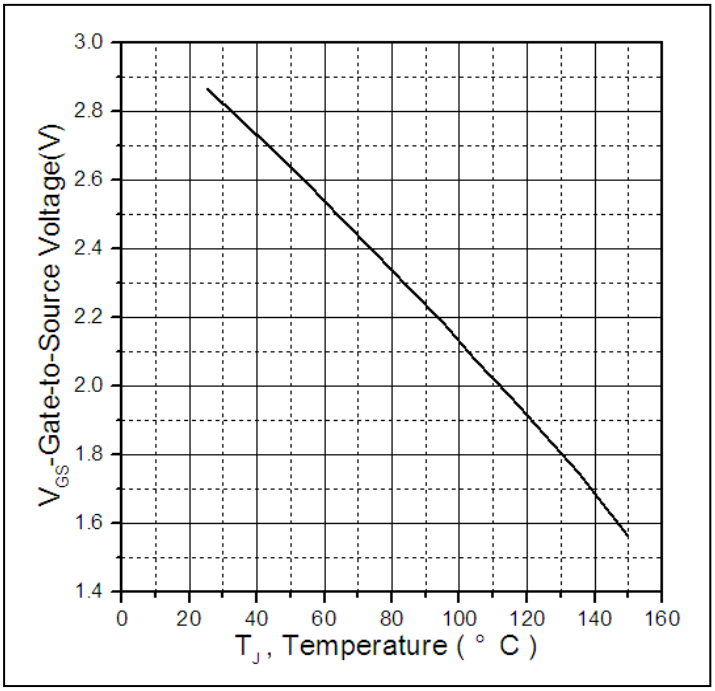

Figure 2. Gate to source cut-off voltage

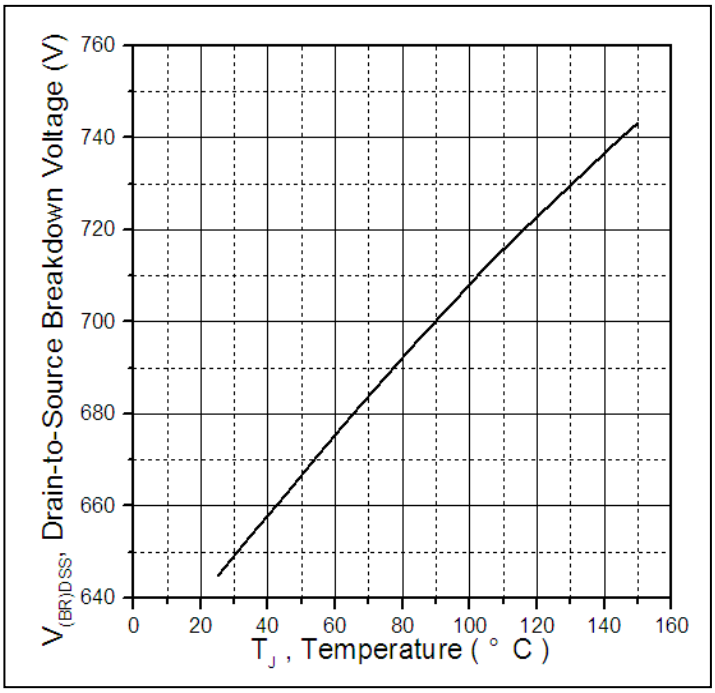

Figure 3. Drain-to-Source Breakdown Voltage Vs. Case Temperature

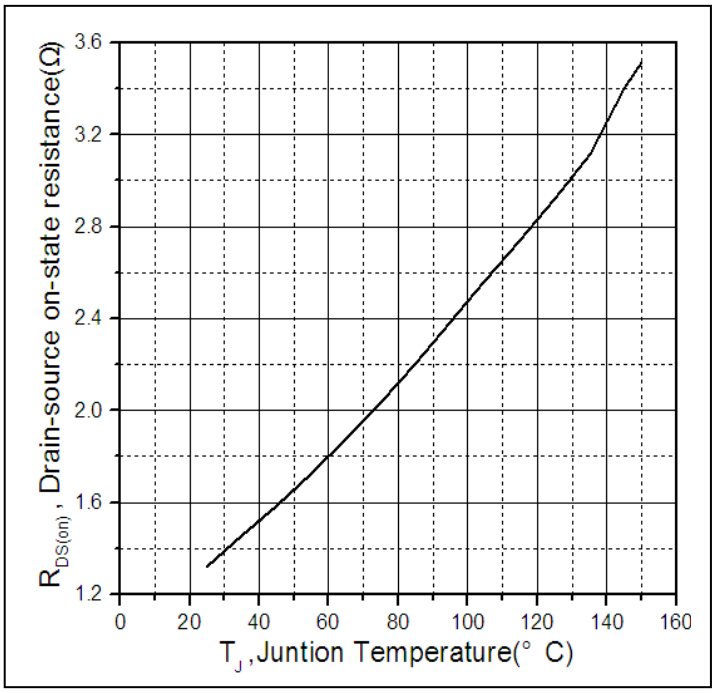

Figure 4: Normalized On-Resistance Vs. Case Temperature

Typical electrical and thermal characteristics

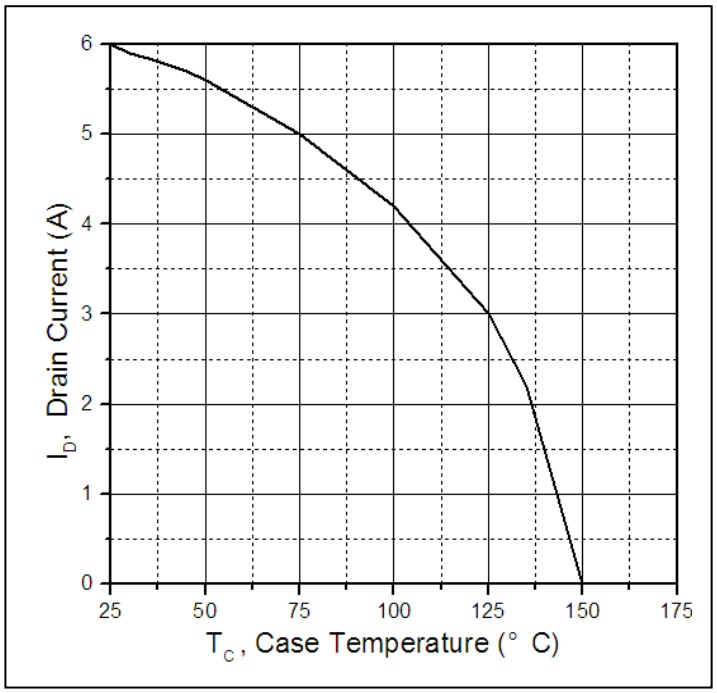

Figure 5. Maximum Drain Current Vs. Case Temperature

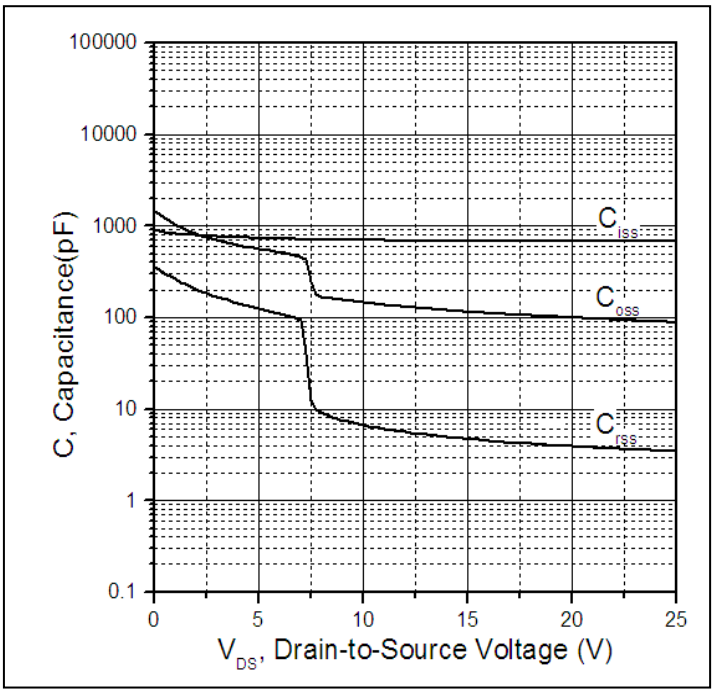

Figure 6.Typical Capacitance Vs. Drain-to-Source Voltage

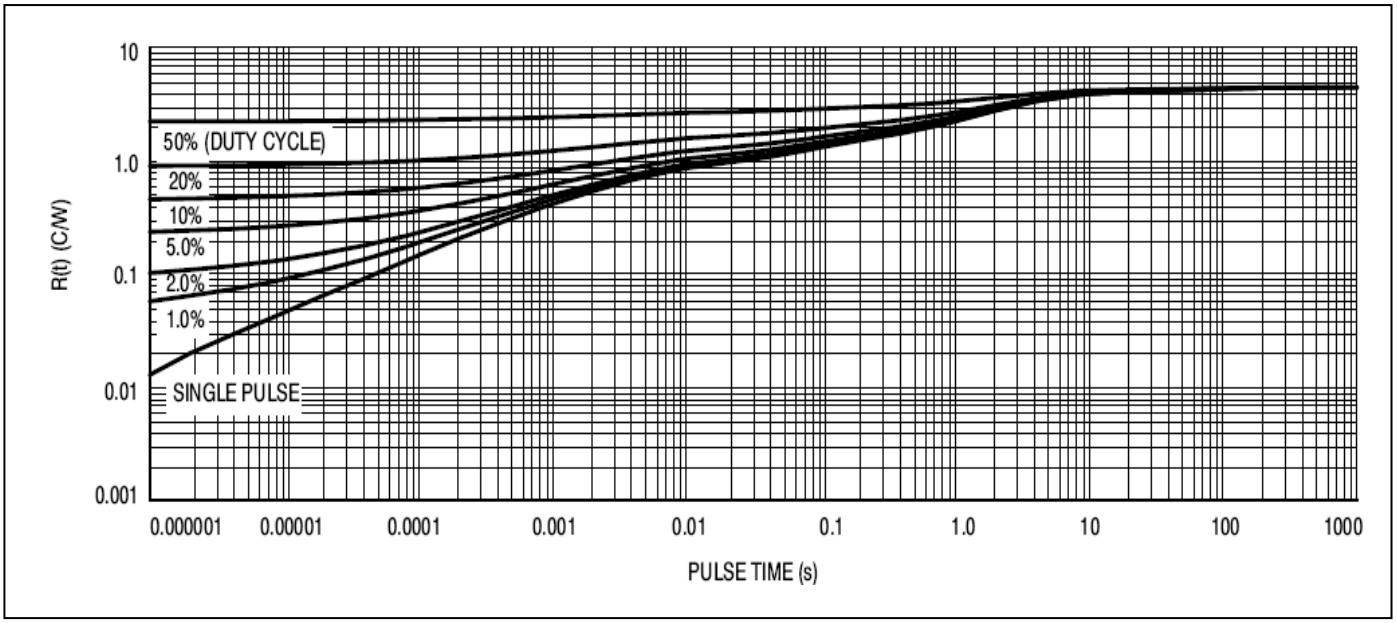

Figure7. Maximum Effective Transient Thermal Impedance, Junction-to-Case

Mechanical Data：

TO-251 PACKAGE OUTLINE DIMENSION

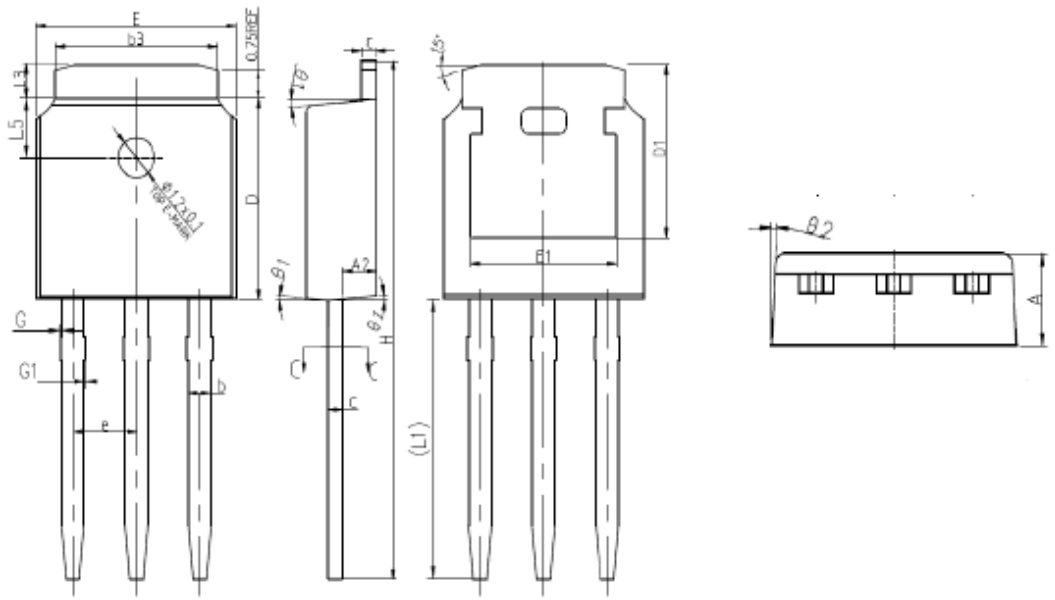

Symbol	Dimension In Millimeters			Dimension In Inches		
	Min	Nom	Max	Min	Nom	Max
A	2.200	2.300	2.380	0.087	0.091	0.094
A2	0.970	1.070	1.170	0.038	0.042	0.046
b	0.720	0.780	0.850	0.028	0.031	0.033
b1	0.710	0.760	0.810	0.028	0.030	0.032
b3	5.230	5.330	5.460	0.206	0.210	0.215
c	0.470	0.530	0.580	0.019	0.021	0.023
c1	0.460	0.510	0.560	0.018	0.020	0.022
D	6.000	6.100	6.200	0.236	0.240	0.244
D1		5.300REF			0.209REF	
E	6.500	6.600	6.700	0.256	0.260	0.264
E1	4.700	4.830	4.920	0.185	0.190	0.194
e		2.286BSC			0.090BSC	
H	16.100	16.400	16.600	0.634	0.646	0.654
L1	9.200	9.400	9.600	0.362	0.370	0.378
L3	0.900	1.020	1.250	0.035	0.040	0.049
L5	1.700	1.800	1.900	0.067	0.071	0.075
θ1	5°	7°	9°	5°	7°	9°
θ2	5°	7°	9°	5°	7°	9°
G	0.000		0.076	0.000	0.000	0.003
G1	0.000		0.076	0.000	0.000	0.003

Ordering and Marking Information

Device Marking: SSF6N60G

Package (Available)
TO-251（IPAK）
Operating Temperature Range
C : -55 to 150 ºC

Devices per Unit

Package Type	Units/ Tube	Tubes/Inner Box	Units/Inner Box	Inner Boxes/Carton Box	Units/Carton Box
TO-251	80	60	4800	5	24000

Reliability Test Program

Test Item	Conditions	Duration	Sample Size
High Temperature Reverse Bias(HTRB)	T_j=125℃ to 150℃ @ 80% of Max V_{DSS}/V_{CES}/VR	168 hours 500 hours 1000 hours	3 lots x 77 devices
High Temperature Gate Bias(HTGB)	T_j=150℃ @ 100% of Max V_{GSS}	168 hours 500 hours 1000 hours	3 lots x 77 devices

ATTENTION:

- Any and all Silikron products described or contained herein do not have specifications that can handle applications that require extremely high levels of reliability, such as life-support systems, aircraft's control systems, or other applications whose failure can be reasonably expected to result in serious physical and/or material damage. Consult with your Silikron representative nearest you before using any Silikron products described or contained herein in such applications.
- Silikron assumes no responsibility for equipment failures that result from using products at values that exceed, even momentarily, rated values (such as maximum ratings, operating condition ranges, or other parameters) listed in products specifications of any and all Silikron products described or contained herein.
- Specifications of any and all Silikron products described or contained herein stipulate the performance, characteristics, and functions of the described products in the independent state, and are not guarantees of the performance, characteristics, and functions of the described products as mounted in the customer's products or equipment. To verify symptoms and states that cannot be evaluated in an independent device, the customer should always evaluate and test devices mounted in the customer's products or equipment.
- Silikron Semiconductor CO.,LTD. strives to supply high-quality high-reliability products. However, any and all semiconductor products fail with some probability. It is possible that these probabilistic failures could give rise to accidents or events that could endanger human lives, that could give rise to smoke or fire, or that could cause damage to other property. When designing equipment, adopt safety measures so that these kinds of accidents or events cannot occur. Such measures include but are not limited to protective circuits and error prevention circuits for safe design, redundant design, and structural design.
- In the event that any or all Silikron products(including technical data, services) described or contained herein are controlled under any of applicable local export control laws and regulations, such products must not be exported without obtaining the export license from the authorities concerned in accordance with the above law.
- No part of this publication may be reproduced or transmitted in any form or by any means, electronic or mechanical, including photocopying and recording, or any information storage or retrieval system, or otherwise, without the prior written permission of Silikron Semiconductor CO.,LTD.
- Information (including circuit diagrams and circuit parameters) herein is for example only ; it is not guaranteed for volume production. Silikron believes information herein is accurate and reliable, but no guarantees are made or implied regarding its use or any infringements of intellectual property rights or other rights of third parties.
- Any and all information described or contained herein are subject to change without notice due to product/technology improvement, etc. When designing equipment, refer to the "Delivery Specification" for the Silikron product that you intend to use.
- This catalog provides information as of Dec, 2008. Specifications and information herein are subject to change without notice.

Customer Service

Worldwide Sales and Service:

Sales@silikron.com

Technical Support:

Technical@silikron.com

Suzhou Silikron Semiconductor Corp.

11A, 428 Xinglong Street, Suzhou Industrial Park, P.R.China

TEL: (86-512) 62560688

FAX: (86-512) 65160705

E-mail: Sales@silikron.com