Art.-Number: 701106

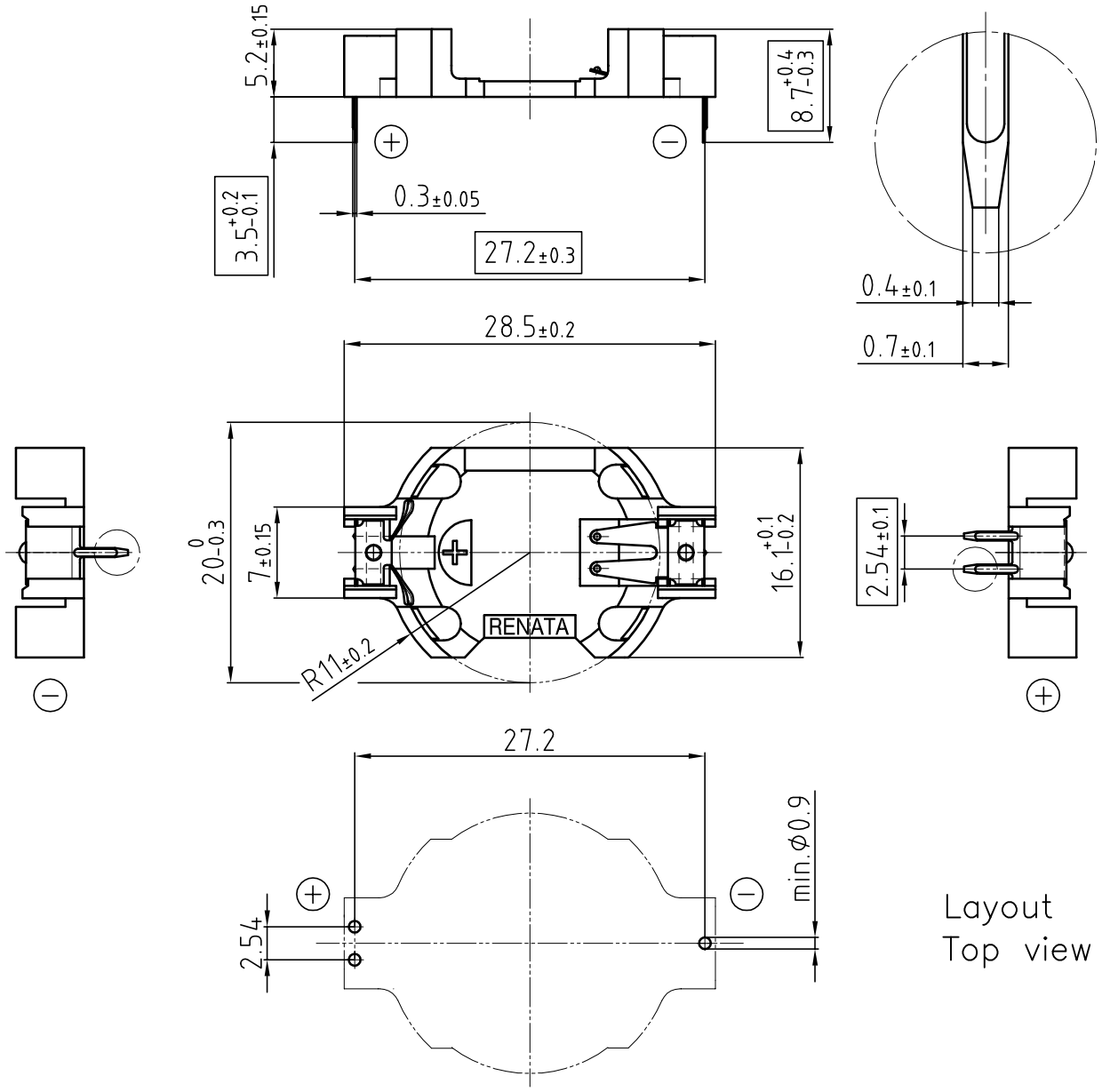

- Samples can deviate in the execution from the serie.

- Dimensions and tolerances can be specified only after the testing of the devices for the mass production definitely

Holder material : heat resistant, glass-fiber reinforced LCP

Battery contacts : spring stainless steel 301 nickel plated throughout

Solder contacts : spring stainless steel 301 solder area tin-plated throughout, min. thickness 5µm

All framed values will be used for dimension checking !

Rev.	1	10.09.07	MCi	Rev.					Customer's Approval		
Rev.	2	17.09.10	Wu Ping	Rev.					Date		
Rev.				Rev.					Signature		
Titel: HU2032-LF								Scale 2:1	Drawn	20.01.05	SRi
									Checked	23.09.10	SRi
									Approved		

renata batteries

CH–4452 Itingen
Switzerland

3.8751.4-2