74V2G03

DUAL 2-INPUT OPEN DRAIN NAND GATE

PRELIMINARY DATA

- HIGH SPEED: t_{PD} = 3.9ns (TYP.) at V_{CC} = 5V
- LOW POWER DISSIPATION:
  I_{CC} = 1µA(MAX.) at T_A=25°C
- HIGH NOISE IMMUNITY:
  V_{NIH} = V_{NIL} = 28% V_{CC} (MIN.)
- POWER DOWN PROTECTION ON INPUTS
- OPERATING VOLTAGE RANGE:
  V_{CC}(OPR) = 2V to 5.5V
- IMPROVED LATCH-UP IMMUNITY

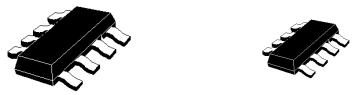

SOT23-8L **SOT323-8L**

ORDER CODES

PACKAGE	T & R
SOT23-8L	74V2G03STR
SOT323-8L	74V2G03CTR

DESCRIPTION

The 74V2G03 is an advanced high-speed CMOS DUAL 2-INPUT OPEN DRAIN NAND GATE fabricated with sub-micron silicon gate and double-layer metal wiring C^2MOS technology.

The internal circuit is composed of 3 stages including buffer output, which provide high noise immunity and stable output.

The device can, with an external pull-up resistor, be used in wired AND configuration. This device can also be used as a led driver in any other application requiring current sink.

Power down protection is provided on all inputs and 0 to 7V can be accepted on inputs with no regard to the supply voltage. This device can be used to interface 5V to 3V.

PIN CONNECTION AND IEC LOGIC SYMBOLS

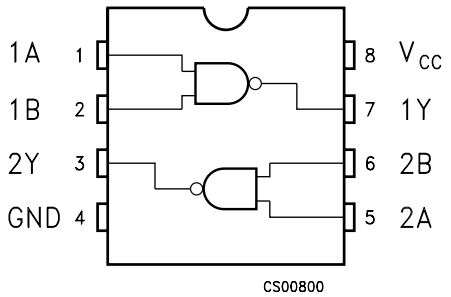

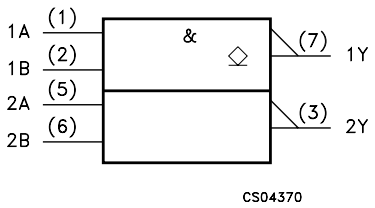

This is preliminary information on a new product now in development are or undergoing evaluation. Details subject to change without notice.

INPUT EQUIVALENT CIRCUIT

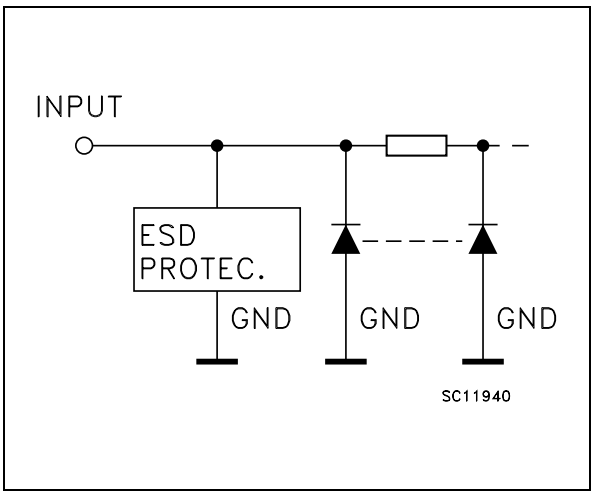

PIN DESCRIPTION

PIN No	SYMBOL	NAME QND FUNCTION
1, 5	1A, 2A	Data Input
2, 6	1B, 2B	Data Input
7, 3	1Y, 2Y	Data Output
4	GND	Ground (0V)
8	V_{CC}	Positive Supply Voltage

TRUTH TABLE

A	B	Y
L	L	Z
L	H	Z
H	L	Z
H	H	L

Z: High Impedance

ABSOLUTE MAXIMUM RATINGS

Symbol	Parameter	Value	Unit
V_{CC}	Supply Voltage	-0.5 to +7.0	V
V_I	DC Input Voltage	-0.5 to +7.0	V
V_O	DC Output Voltage	-0.5 to V_{CC} + 0.5	V
I_{IK}	DC Input Diode Current	- 20	mA
I_{OK}	DC Output Diode Current	± 20	mA
I_O	DC Output Current	± 25	mA
I_{CC} or I_{GND}	DC V_{CC} or Ground Current	± 50	mA
T_{stg}	Storage Temperature	-65 to +150	°C
T_L	Lead Temperature (10 sec)	260	°C

Absolute Maximum Ratings are those values beyond which damage to the device may occur. Functional operation under these conditions is not implied.

RECOMMENDED OPERATING CONDITIONS

Symbol	Parameter	Value	Unit
V_{CC}	Supply Voltage	2 to 5.5	V
V_I	Input Voltage	0 to 5.5	V
V_O	Output Voltage	0 to V_{CC}	V
T_{op}	Operating Temperature	-55 to 125	°C
dt/dv	Input Rise and Fall Time (note 1) (V_{CC} = 3.3 ± 0.3V) (V_{CC} = 5.0 ± 0.5V)	0 to 100 0 to 20	ns/V ns/V

1) V_{IN} from 30% to 70% of V_{CC}

DC SPECIFICATIONS

Symbol	Parameter	Test Condition		Value							Unit
		V_{CC} (V)		T_A = 25°C			-40 to 85°C		-55 to 125°C		
				Min.	Typ.	Max.	Min.	Max.	Min.	Max.	
V_{IH}	High Level Input Voltage	2.0		1.5			1.5		1.5		V
		3.0 to 5.5		$0.7V_{CC}$			$0.7V_{CC}$		$0.7V_{CC}$		
V_{IL}	Low Level Input Voltage	2.0				0.5		0.5		0.5	V
		3.0 to 5.5				$0.3V_{CC}$		$0.3V_{CC}$		$0.3V_{CC}$	
V_{OL}	Low Level Output Voltage	2.0	I_O=50 µA		0.0	0.1		0.1		0.1	V
		3.0	I_O=50 µA		0.0	0.1		0.1		0.1	
		4.5	I_O=50 µA		0.0	0.1		0.1		0.1	
		3.0	I_O=4 mA			0.36		0.44		0.55	
		4.5	I_O=8 mA			0.36		0.44		0.55	
I_{OZ}	High Impedance Output Leakage Current	5.5	$V_I = V_{IH}$ or V_{IL} $V_O = V_{CC}$ or GND			± 0.25		± 2.5		± 5	µA
I_I	Input Leakage Current	0 to 5.5	V_I = 5.5V or GND			± 0.1		± 1		± 1	µA
I_{CC}	Quiescent Supply Current	5.5	$V_I = V_{CC}$ or GND			1		10		20	µA

AC ELECTRICAL CHARACTERISTICS

Symbol	Parameter	Test Condition			Value							Unit
		V_{CC} (V)	C_L (pF)		T_A = 25°C			-40 to 85°C		-55 to 125°C		
					Min.	Typ.	Max.	Min.	Max.	Min.	Max.	
t_{PZL}	Propagation Delay Time	3.3(*)	15			4.8	6.5	1.0	8.0	1.0	9.0	ns
		3.3(*)	50			5.3	7.5	1.0	9.0	1.0	10.0	
		5.0(**)	15			3.9	5.5	1.0	6.5	1.0	7.5	
		5.0(**)	50			4.3	6.0	1.0	7.5	1.0	8.5	
t_{PLZ}	Propagation Delay Time	3.3(*)	50			6.8	9.5	1.0	10.0	1.0	11.0	ns
		5.0(**)	50			4.8	6.5	1.0	7.0	1.0	8.0	

(*) Voltage range is 3.3V ± 0.3V
(**) Voltage range is 5.0V ± 0.5V

CAPACITIVE CHARACTERISTICS

Symbol	Parameter	Test Condition	Value							Unit
			T_A = 25°C			-40 to 85°C		-55 to 125°C		
			Min.	Typ.	Max.	Min.	Max.	Min.	Max.	
C_{IN}	Input Capacitance			4	10		10		10	pF
C_{OUT}	Output Capacitance			5	10		10		10	pF
C_{PD}	Power Dissipation Capacitance (note 1)			3						pF

1) C_{PD} is defined as the value of the IC's internal equivalent capacitance which is calculated from the operating current consumption without load. (Refer to Test Circuit). Average operating current can be obtained by the following equation. $I_{CC(opr)} = C_{PD} \times V_{CC} \times f_{IN} + I_{CC}$

TEST CIRCUIT

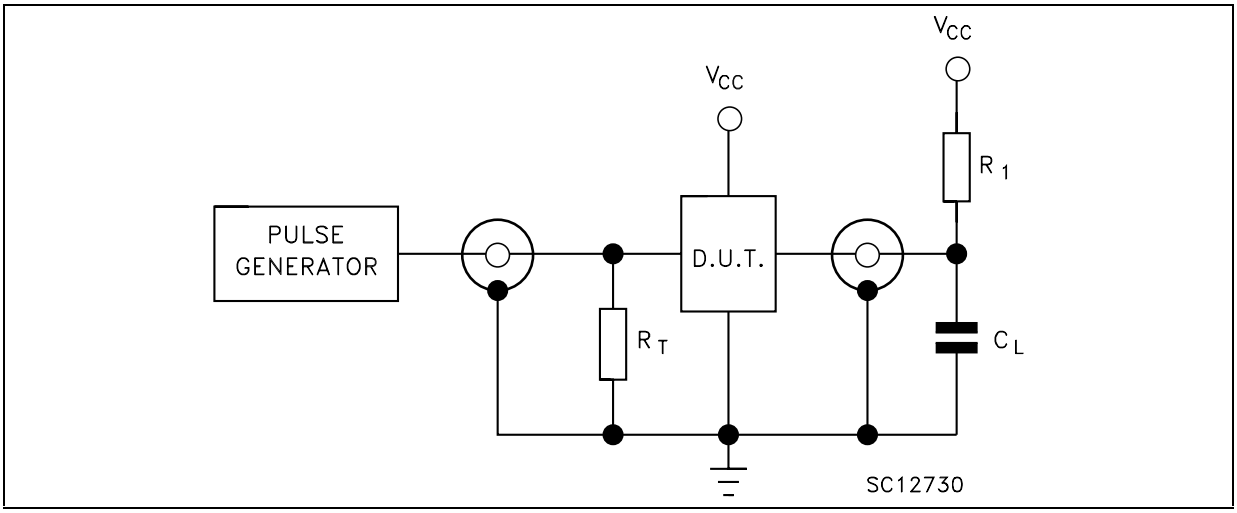

C_L = 15/50pF or equivalent (includes jig and probe capacitance)
R_1 = 1KΩ or equivalent
R_T = Z_{OUT} of pulse generator (typically 50Ω)

WAVEFORM: PROPAGATION DELAY (f=1MHz; 50% duty cycle)

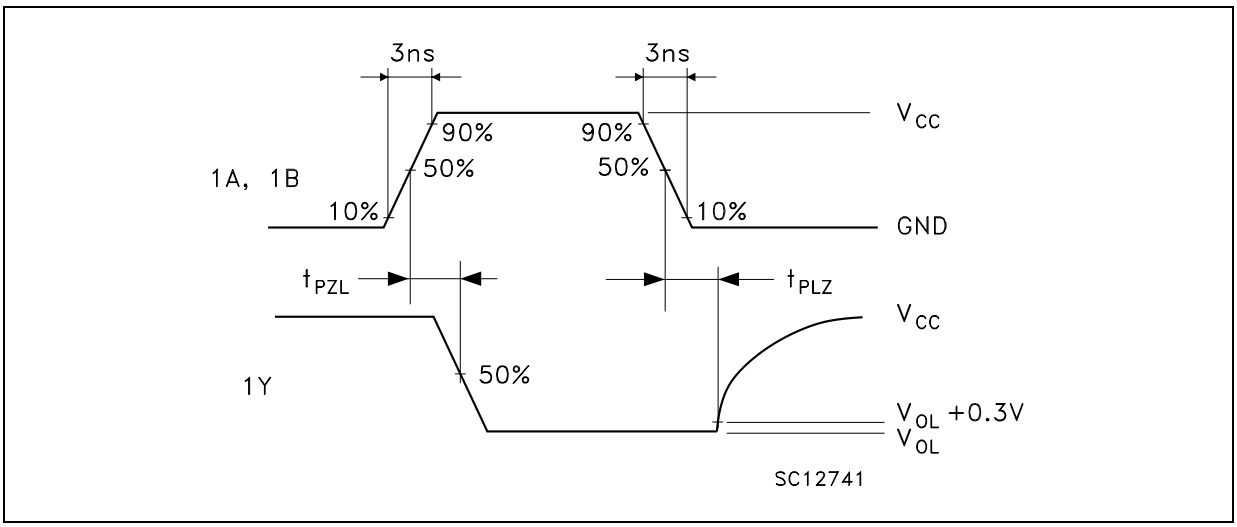

SOT23-8L MECHANICAL DATA

DIM.	mm.			mils		
	MIN.	TYP	MAX.	MIN.	TYP.	MAX.
A	0.90		1.45	35.4		57.1
A1	0.00		0.15	0.0		5.9
A2	0.90		1.30	35.4		51.2
b	0.22		0.38	8.6		14.9
C	0.09		0.20	3.5		7.8
D	2.80		3.00	110.2		118.1
E	2.60		3.00	102.3		118.1
E1	1.50		1.75	59.0		68.8
e	0	.65			25.6	
e1		1.95			76.7	
L	0.35		0.55	13.7		21.6

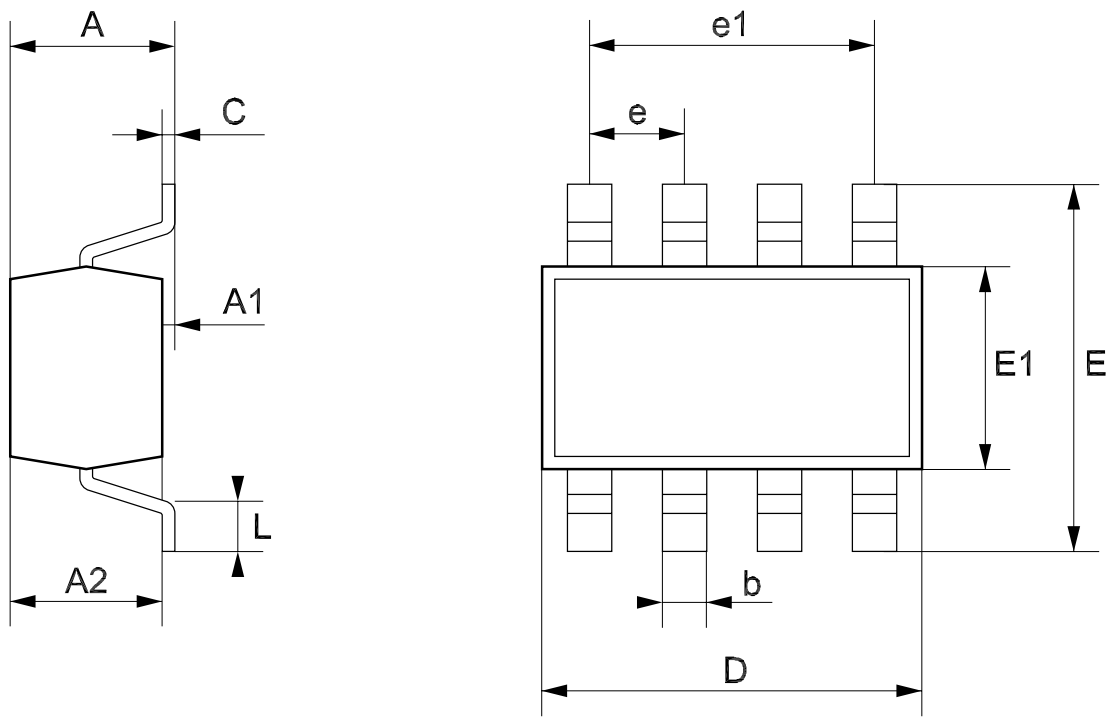

SOT323-8L MECHANICAL DATA

DIM.	mm.			mils		
	MIN.	TYP	MAX.	MIN.	TYP.	MAX.
A	0.80		1.10	31.5		43.3
A1	0.00		0.10	0.0		3.9
A2	0.80		1.00	31.5		34.9
b	0.13		0.28	5.1		11.0
C	0.10		0.18	3.9		7.1
D	1.80		2.20	70.9		86.6
E	1.80		2.40	70.9		94.5
E1	1.15		1.35	45.3		53.1
e		0.5			19.7	
e1		1.5			59.0	
L	0.10		0.30	3.9		11.8

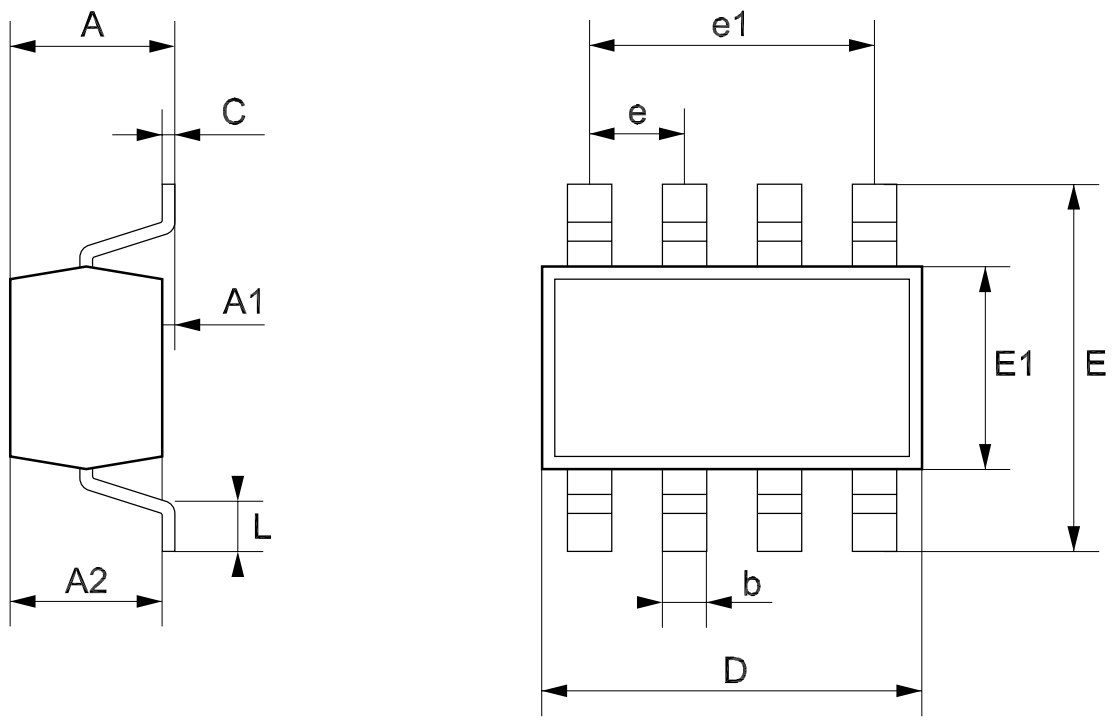

Tape & Reel SOT23-xL MECHANICAL DATA

DIM.	mm.			inch		
	MIN.	TYP	MAX.	MIN.	TYP.	MAX.
A			180			7.086
C	12.8	13.0	13.2	0.504	0.512	0.519
D	20.2			0.795		
N	60			2.362		
T			14.4			0.567
Ao	3.13	3.23	3.33	0.123	0.127	0.131
Bo	3.07	3.17	3.27	0.120	0.124	0.128
Ko	1.27	1.37	1.47	0.050	0.054	0.0.58
Po	3.9	4.0	4.1	0.153	0.157	0.161
P	3.9	4.0	4.1	0.153	0.157	0.161

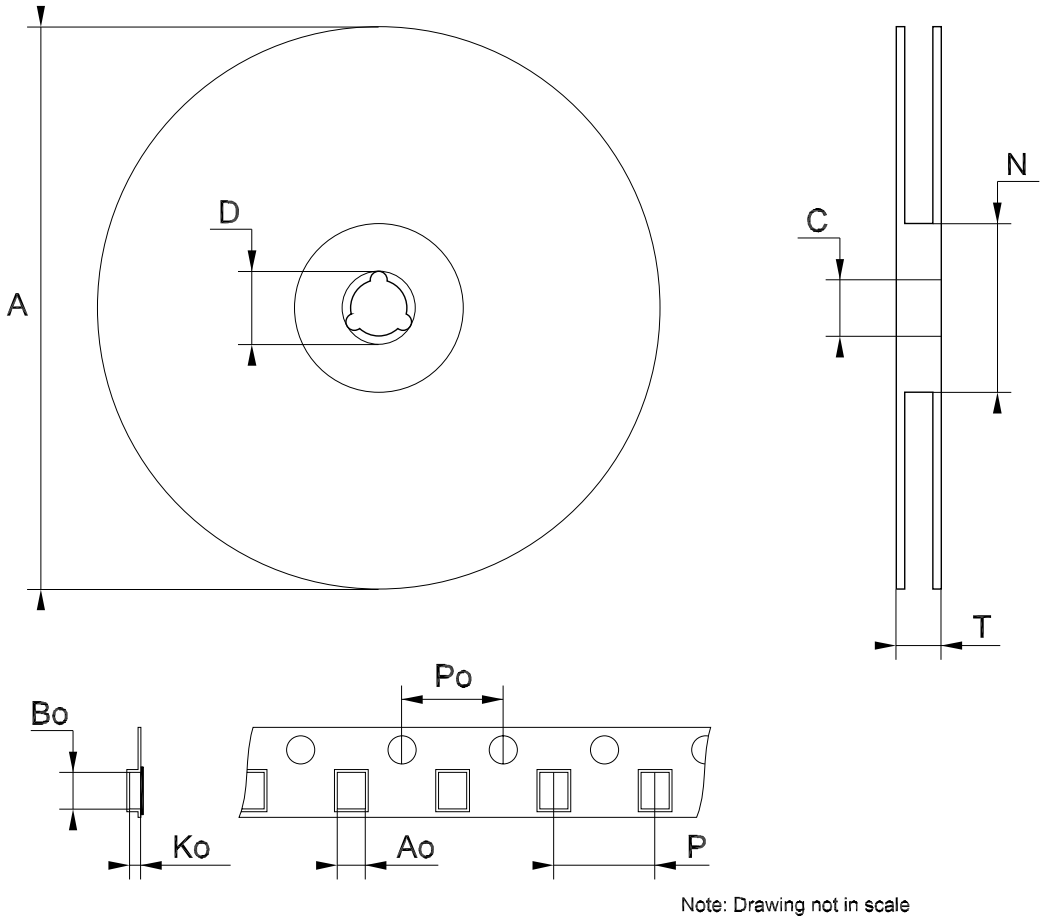

Tape & Reel SOT323-xL MECHANICAL DATA

DIM.	mm.			inch		
	MIN.	TYP	MAX.	MIN.	TYP.	MAX.
A	175	180	185	6.889	7.086	7.283
C	12.8	13	13.2	0.504	0.512	0.519
D	20.2			0.795		
N	59.5	60	60.5		2.362	
T			14.4			0.567
Ao		2.25			0.088	
Bo		2.7			0.106	
Ko		1.2			0.047	
Po	3.98	4	4.2	0.156	0.157	0.165
P	3.98	4	4.2	0.156	0.157	0.165

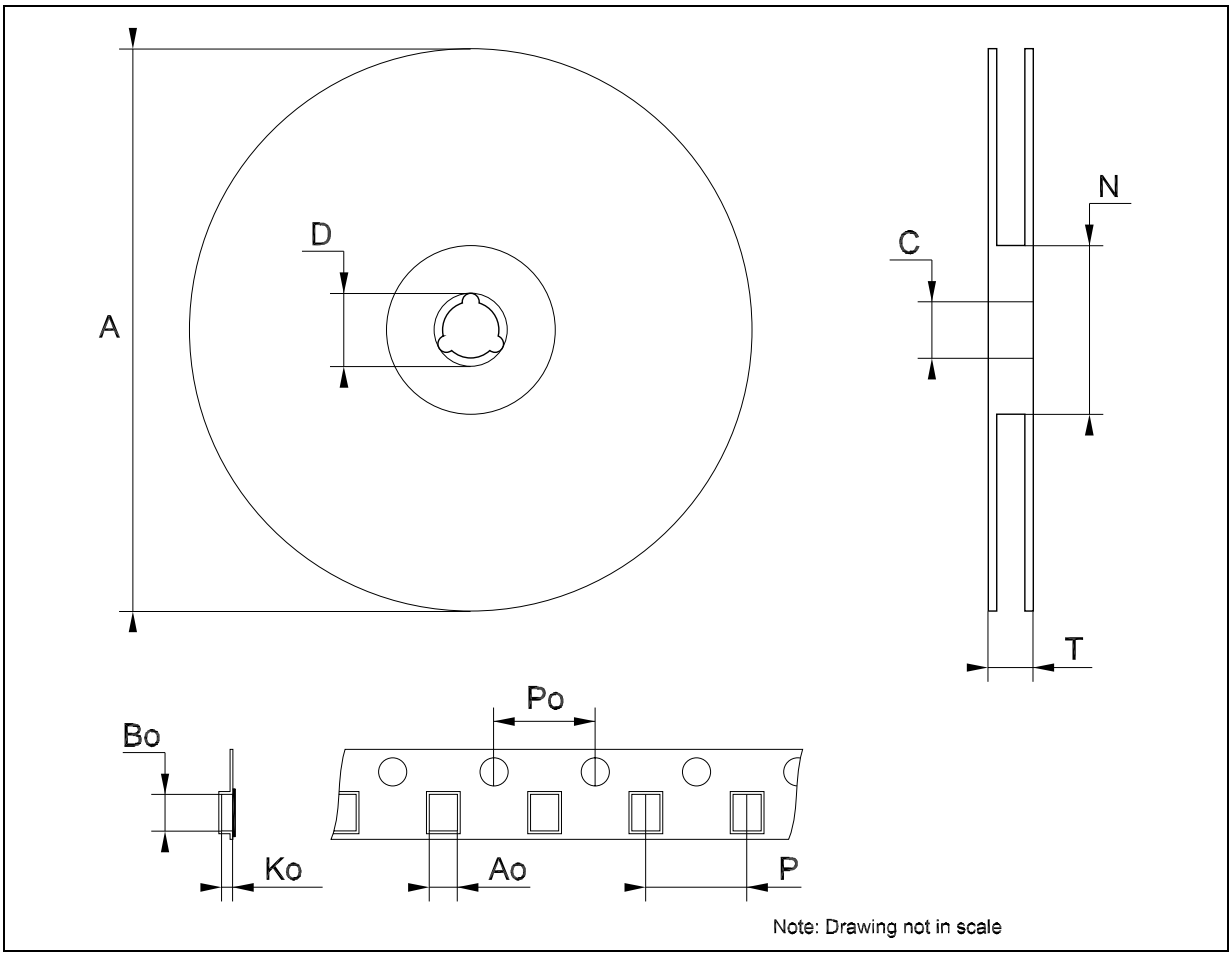

Information furnished is believed to be accurate and reliable. However, STMicroelectronics assumes no responsibility for the consequences of use of such information nor for any infringement of patents or other rights of third parties which may result from its use. No license is granted by implication or otherwise under any patent or patent rights of STMicroelectronics. Specifications mentioned in this publication are subject to change without notice. This publication supersedes and replaces all information previously supplied. STMicroelectronics products are not authorized for use as critical components in life support devices or systems without express written approval of STMicroelectronics.

© The ST logo is a registered trademark of STMicroelectronics

© 2001 STMicroelectronics - Printed in Italy - All Rights Reserved
STMicroelectronics GROUP OF COMPANIES
Australia - Brazil - Canada - China - Finland - France - Germany - Hong Kong - India - Israel - Italy - Japan - Malaysia - Malta - Morocco
Singapore - Spain - Sweden - Switzerland - United Kingdom - United States.
© http://www.st.com