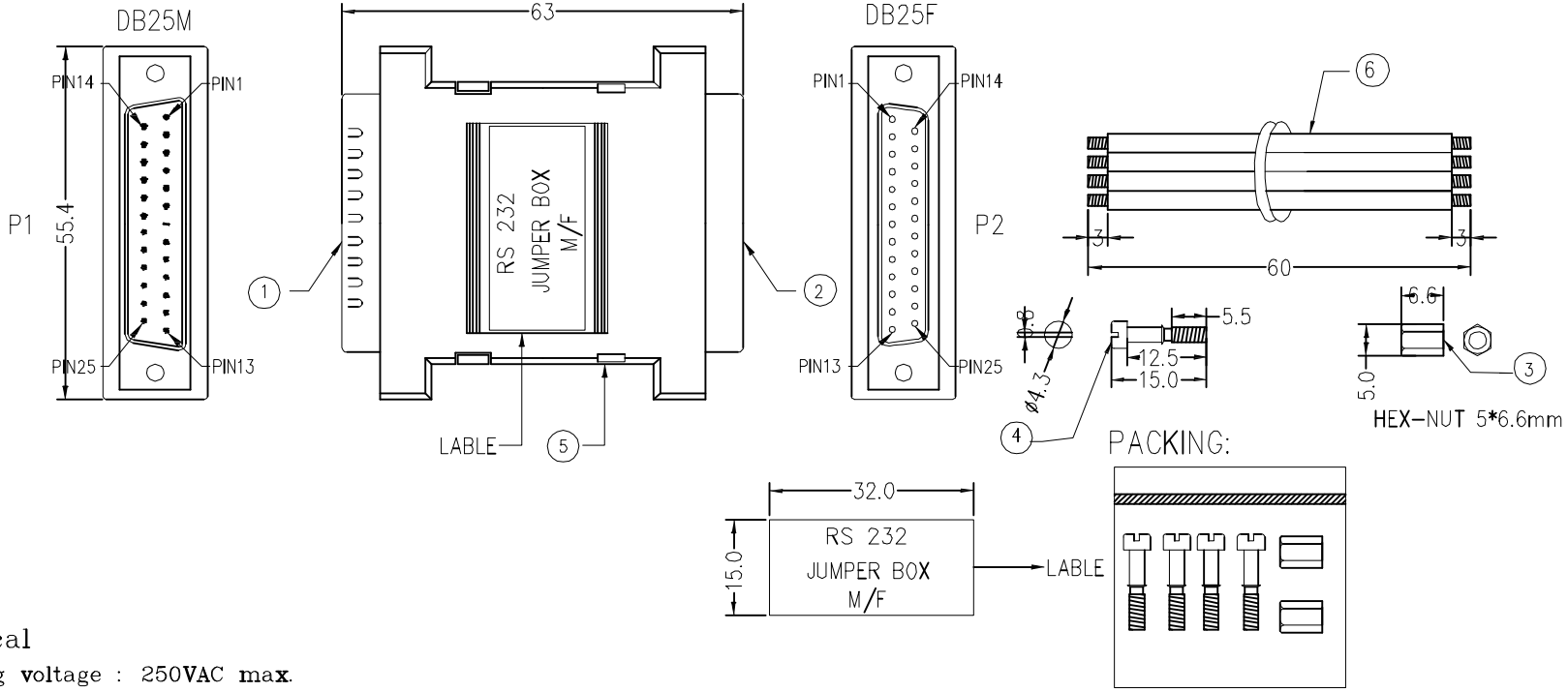

Electrical

Operating voltage : 250VAC max.

Current rating: 3Amps max.

Insulation resistance: 1000 Mohms min 500VDC

Dielectric withstanding voltage: 1000VAC for 1MINIUTE

Operating termperature: −55c to +105c

No.	DFSCRIPTION	Q'TY	Supplier
6	UL1007 26AWG INSULATOR WIRE, LENGIH 60mm	25	M541
5	PCB: SAK-7	1	M730
	ELECTRO-PLATED HOOD	1SET	M16
4	SCREW 4*12.5mm, #4-40,WITH PAD,ASSEMBLY TYPE	4	M95
3	HEX-NUT 5*6.6mm	2	M95
2	DB25 FEMALE, GOLD FLASH ON CONTACTS, BLUE INSULATOR	1	M108
1	DB25 MALE, GOLD FLASH ON CONTACTS, BLUE INSULATOR	1	M108

RoHS compliant

Unit: mm

Scale	Free
TOLERANCE	
X.	±1
X.X	±0.20
DIM	TOL
Angle	TOL

Id.	Modification	Date	Name
0	Drawn	11.08.2014	Joanna

	Date	Name
Drawn	11.08.2014	Joanna
Approved	11.08.2014	Joanna

ASSMANN WSW components

Customer-No.

ASSMANN WSW-No.
AB972

Drawing-No.
ASS 7208 CA

rev00

Replace

Sheet