JFW MODEL
115-455

IMPEDANCE
50 Ohms nominal

FREQUENCY RANGE
DC-18 GHz

VSWR (typical)

2 GHz	1.027:1
4 GHz	1.069:1
6 GHz	1.051:1
8 GHz	1.087:1
10 GHz	1.043:1
12 GHz	1.051:1
14 GHz	1.151:1
16 GHz	1.064:1
18 GHz	1.088:1

Connector Body
Passivated SS

Connector Pins
Gold plated BeCu

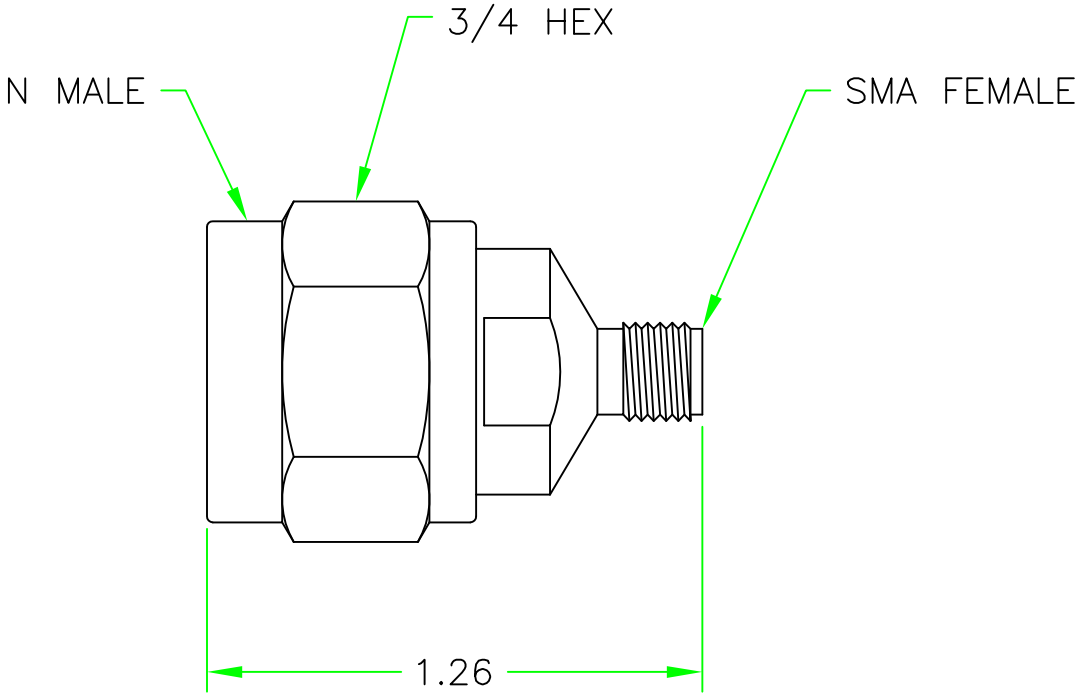

REV	ECN	DATE	BY	APPR
–	ISSUED	4–19–18	DTS	TRS
A	28718	5–7–18	DTS	TRS

JFW INDUSTRIES, INC.
www.jfwindustries.com PH: 317–887–1340

MATERIAL	STAINLESS STEEL		PROPRIETARY INFORMATION
FINISH	PASSIVATED		ALL SURFACES ARE TO BE FREE OF BURRS, PITS, & SCRATCHES
MODEL	115–455	SCALE 2X	TOLERANCES .XX±.010 .XXX±.005 XX°±.5°
DESCRIPTION	RF ADAPTER SMA FEMALE/N MALE		DWG # 115–455