APPROVED: _____

DATE: _____ TITLE: _____

Rev	AWO #	Description	Date	Appr
-		RELEASED	9/30/08	
A		CHANGED TEMPERATURE	6/15/10	
B		REVISED SHAPE	10/7/10	

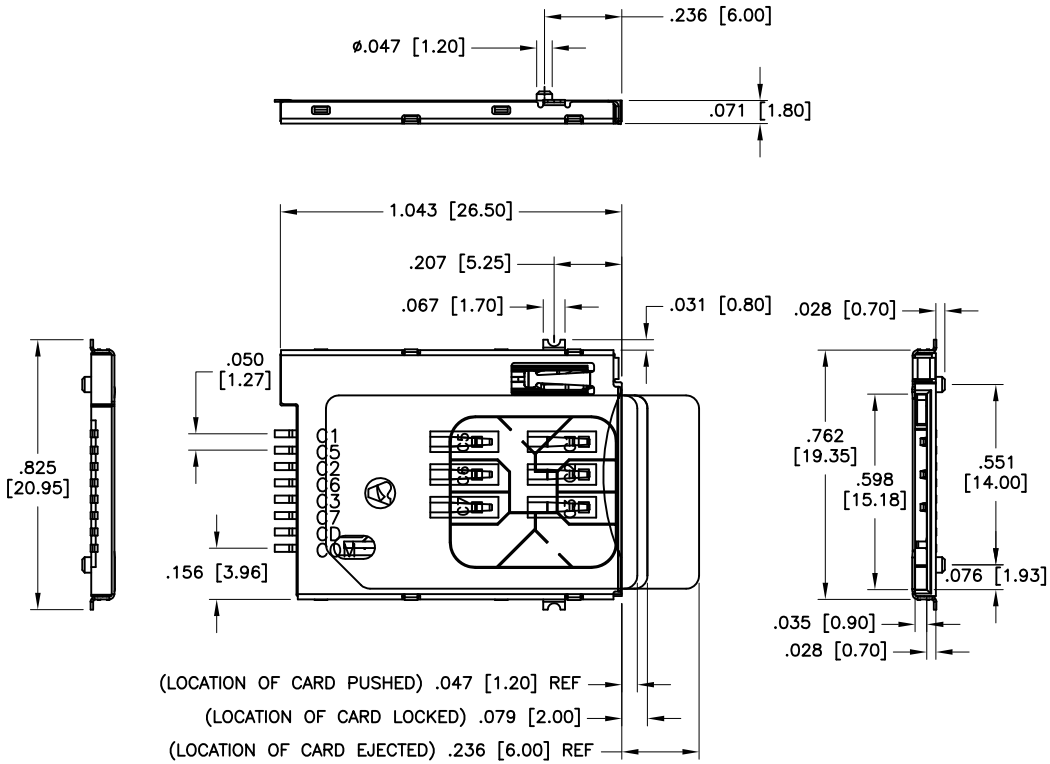

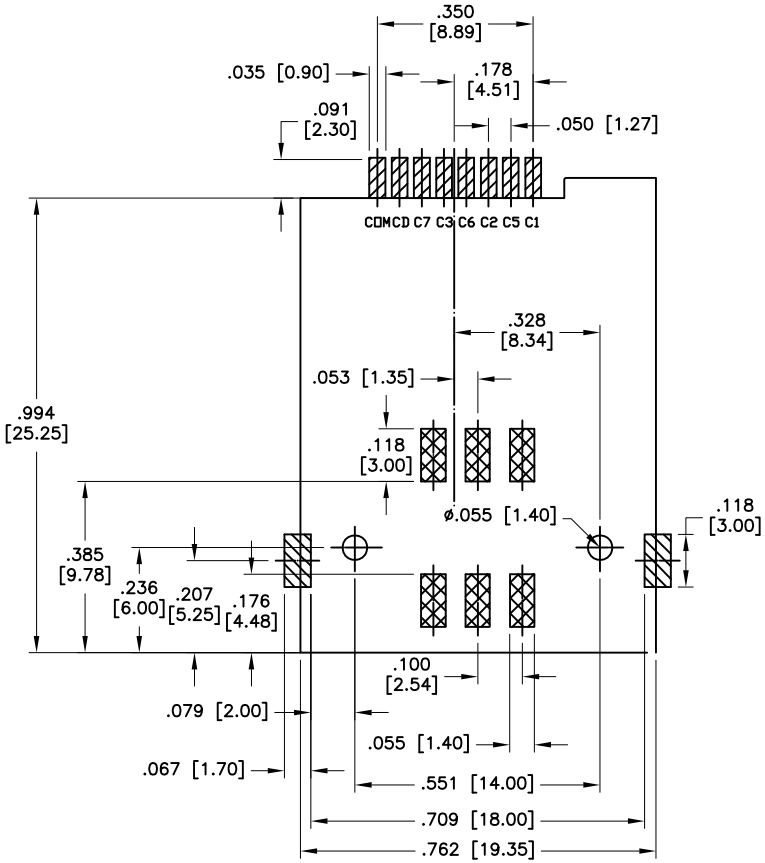

Recommended PCB Layout

SPECIFICATIONS:

Material:

Insulator: LCP with glass fiber reinforced, rated UL 94V–0

Insulator color: Black

Contacts: Phosphor Bronze

Metal cover and Boardlock: Stailess steel sheet.

Plating:

10u" Gold over Nickel underplate on contact area,

Tin over Copper underplate on SMT tails

Electrical:

Current rating: 0.5 Amps max

Contact resistance: 30 mohms max.

Insulation resistance: 1000 Mohms min @ 500V DC

Dielectric withstanding voltage: 500 VAC for 1 minute

Temperature Rating:

Operating temperature: –40°C to +85°C

Environmental:

Lead free, RoHS compliant.

Recommended soldering temp: 260°C for 5 sec.

RoHS COMPLIANT

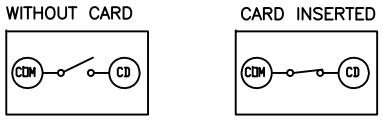

CARD DETECT SW. STATUS.

UNLESS OTHERWISE SPECIFIED
ALL DIMENSIONS ARE INCHES [MM]
TOLERANCES: EXCEPT AS NOTED

INCHES		HOLES	
.X	± .10	Ø.X	±.10
.XX	± .020	Ø.XX	±.015
.XXX	± .015	Ø.XXX	±.010

APPROVALS		DATE
DRAWN	DY	9/30/08
CHECKED		
APPROVED		

ADAM TECH

909 Rahway Avenue, Union, NJ 07083

Phone: 908-687-5000 Fax: 908-687-5710

TITLE: SIM CARD SOCKET 6+2 PIN, PUSH PUSH TYPE NO STAND OFF

SIZE	PART NO.	REV.
X	SCCP-08-SG-SMT	B

REF: S00009T | SCALE: NTS | SHEET 1 OF 1